MEGAFLO Eco Plus
Unvented Hot Water Cylinders
400L, 500L & 570L

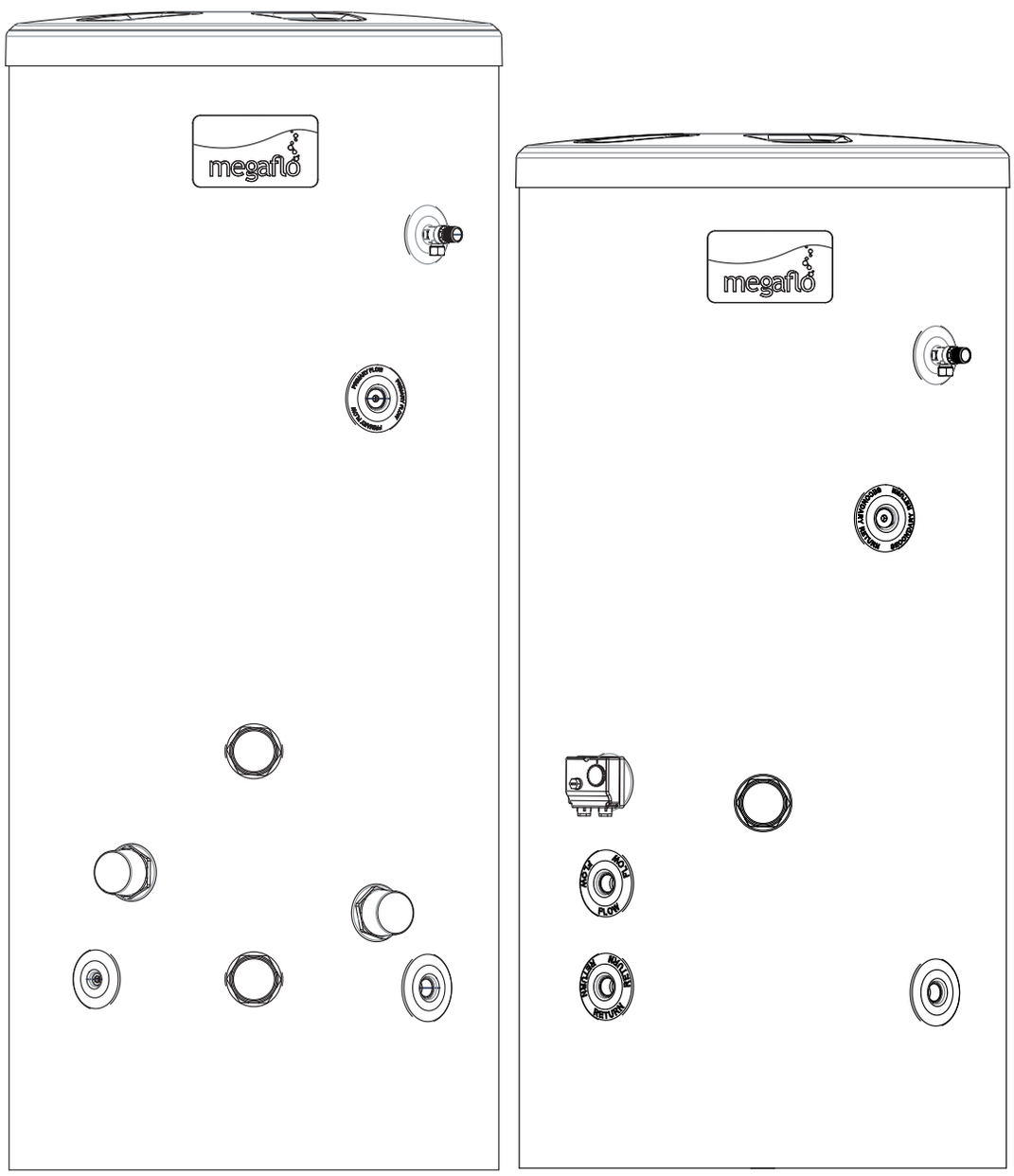

MEGAFLO Eco Plus Product Guide

Contents

Product Specification ..... **Page 3**

Installation and Commissioning Instructions ..... **Page 10**

Maintenance and Servicing ..... **Page 22**

User Guide ..... **Page 28**

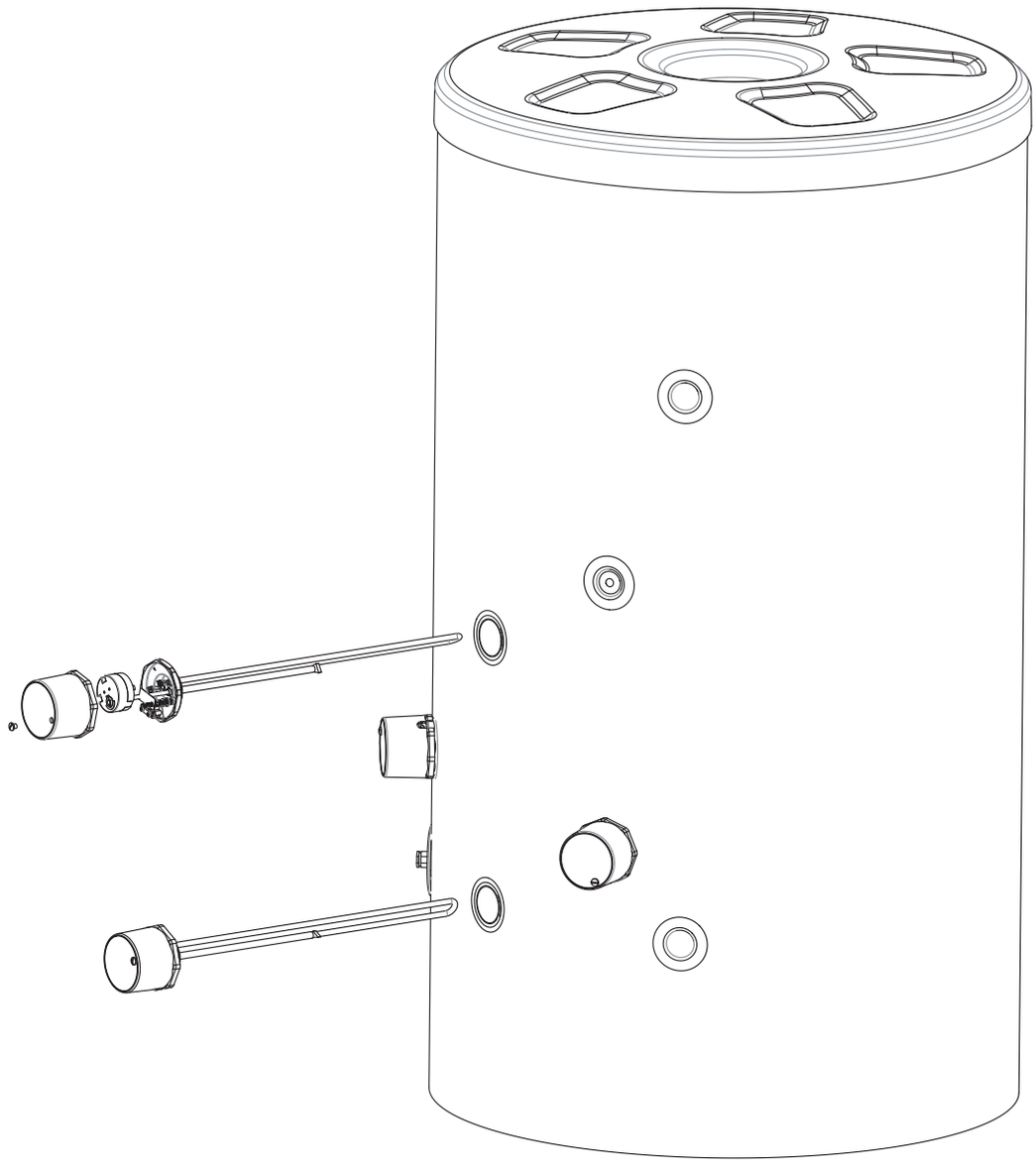

- Introduction
- Checklist
- General Requirements
- Water Supply
- Power Supply
- The Environment
- Specification and Dimensions

THE BENCHMARK^{tm} SCHEME

Benchmark^{tm} places responsibilities on both manufacturers and installers. The purpose is to ensure that customers are provided with the correct equipment for their needs, that it is installed, commissioned and serviced in accordance with the manufacturer's instructions by competent persons and that it meets the requirements of the appropriate Building Regulations and relevant electrical qualifications. The Benchmark^{tm} Checklist can be used to demonstrate compliance with Building Regulations and should be provided to the customer for future reference. Installers are required to carry out installation, commissioning and servicing work in accordance with the Benchmark^{tm} Code of Practice which is available from the Heating and Hotwater Industry Council who manage and promote the Scheme. Visit www.centralheating.co.uk for more information.

IMPORTANT NOTE TO USER: PLEASE REFER TO THE USER GUIDE SECTION ON PAGES 30 FOR IMPORTANT INFORMATION WITH RESPECT TO THE BENCHMARK SCHEME

Introduction

Congratulations on your purchase of a MEGAFLO **Eco Plus** unvented water heater. The MEGAFLO **Eco Plus** is manufactured in the UK from top quality materials and meets all the latest relevant safety and constructional standards. The high grade Duplex stainless steel cylinder offers exceptional strength and corrosion resistance which is backed by a Lifetime guarantee* Its performance and insulation levels exceed the latest requirements of Building Regulation Part L.

The MEGAFLO **Eco Plus** unvented water heater can be fed directly from the cold water mains supply to the property without the need for separate feed cisterns or vent pipes. It is supplied complete with all its necessary inlet and safety controls, electric immersion heater(s) and, for indirect units, a cylinder thermostat, thermal cut-out and a 2-port motorised valve.

Generally its pressure and flow-rate performance will far exceed that from a comparable vented system, thermal store, multipoint instantaneous gas heater, or combination boiler.

Please read and understand this product guide before starting work.
Please leave this product guide with the user following installation.

Component Checklist

Before commencing installation check that all the components for your MEGAFLO **Eco Plus** unit are contained in the package. The following components are supplied as standard with your MEGAFLO **Eco Plus** unit:

- Factory fitted immersion heater(s) and thermal controls
- Cold Water Inlet Control Kit, comprising of:
  - 3.5 Bar Pressure Reducing Valve
  - 8 Bar Pressure Relief Valve
- Factory fitted Temperature / Pressure Relief Valve (set at 90ºC / 1 Mpa (10bar))
- Tundish (included in Cold Water Combination Valve pack)
- Factory fitted Indirect Thermostat and Thermal cut-out
- 2-Port Motorised Valve (indirect version only)
- Expansion vessel

* See Terms and Conditions of guarantee on page 33

General Requirements

Important:

Please read and understand this product guide before installing the MEGAFLO **Eco Plus** water heater. Incorrect installation may invalidate the guarantee.

THIS APPLIANCE CAN BE USED BY CHILDREN AGED FROM 8 YEARS AND ABOVE AND PERSONS WITH REDUCED PHYSICAL SENSORY OR MENTAL CAPABILITIES OR LACK OF EXPERIENCE AND KNOWLEDGE IF THEY HAVE BEEN GIVEN SUPERVISORY OR INSTRUCTION CONCERNING USE OF THE APPLIANCE IN A SAFE WAY AND UNDERSTAND THE HAZARDS INVOLVED. CHILDREN SHALL NOT PLAY WITH THE APPLIANCE. CLEANING AND USER MAINTENANCE SHALL NOT BE MADE BY CHILDREN WITHOUT SUPERVISION.

Also:
- water may drip from the discharge pipe of the pressure-relief device and this pipe must be left open to the atmosphere; (see page 15 for more details)
-the pressure-relief device is to be operated regularly to remove lime deposits and to verify that it is not blocked; (see page 15 for more details)
- how hot water can be drained. (see page 22 for more details)

The MEGAFLO **Eco Plus** must be Installed (Section 2), Commissioned (Section 2) and Maintained (Section 3) by a competent installer in accordance with Building Regulation G3 (England and Wales), Technical Standard P3 (Scotland) or Building Regulation P5 (Northern Ireland) and the Water Fitting Regulations (England and Wales) or Water Byelaws (Scotland). Following Installation and Commissioning, the operation of the heater should be explained to the user (Section 4) and this product guide left with them for future reference.

Storage and Handling

Please take care when handling a packaged MEGAFLO **Eco Plus**. The unit is heavy and must only be moved manually within safe working practices. If the unit is to be stored before installation, it must be placed on a secure, level surface and in a dry, frost free environment.

Siting the MEGAFLO **Eco Plus (See Figure 1)**
The MEGAFLO **Eco Plus** unit must be vertically floor mounted. It can be placed anywhere convenient provided the discharge pipe(s) from its safety valves can be correctly installed. Areas that are subject to freezing must be avoided. Ensure that the floor is of sufficient strength to support the "full" weight of the unit (refer to Table 6, page 9 for unit weights). Pipe runs should be kept as short as possible for maximum economy. Access to associated controls, immersion heaters and indirect controls should be possible for servicing and maintenance of the system.

FIGURE 1 - SCHEMATIC INSTALLATION DETAILS (GUIDANCE ONLY)

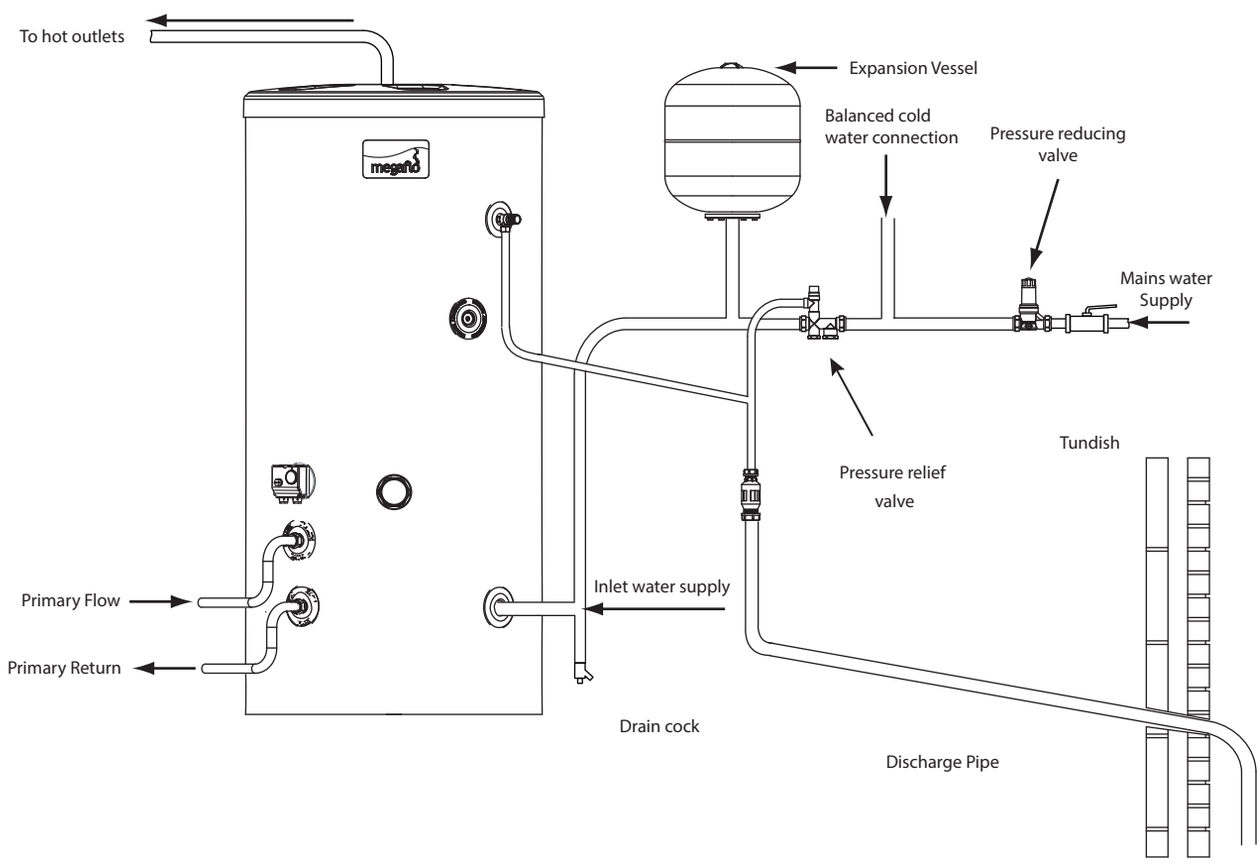

Outlet/Terminal Fittings (Taps, Etc.)

The MEGAFLO **Eco Plus** can be used in conjunction with most types of terminal fittings. It is advantageous in many mixer showers to have balanced hot and cold water supplies, in these instances the balanced cold water supply should be teed off the supply to the MEGAFLO **Eco Plus** immediately after the Cold Water Combination Valve (See Figures 5 page 12). Branches to cold drinking outlets should be taken before the valve. Outlets situated higher than the MEGAFLO **Eco Plus** unit will give outlet pressures lower than that at the heater, a 10m height difference will result in a 0.1 Mpa (1 bar) pressure reduction at the outlet fitting.
NOTE: Accessories should have a rated operating pressure of at least 0.8 MPa (8 bar).

Limitations

The MEGAFLO **Eco Plus** unvented water heater should not be used in any of the following instances:

- Solid fuel boilers or any other boiler in which the energy input is not under effective thermostatic control unless additional and appropriate safety measures are installed.
- Gravity circulation primaries.
- Steam heating plant unless additional and appropriate safety devices are installed.
- Ascending spray type bidets or any other Class 5 back syphonage risk requiring that a Type AA, AB, AD or AG air gap be employed.
- Water supplies that have either inadequate pressure or where the supply may be intermittent.
- Situations where it is not possible to safely pipe away any discharge from the safety valves.
- Areas where the water consistently contains a high proportion of solids, eg. suspended matter that could block the strainer, unless adequate filtration can be ensured.
- The installation must be carried out in accordance with the relevant requirements of:
- The appropriate Building Regulations: either The Building Regulations (England), The Building Regulations (Scotland) or Building Regulations (Northern Ireland).
- The Water Fittings Regulations (England and Wales) or Water Byelaws (Scotland).

Water Supply

Bear in mind that the mains water supply to the property will be supplying both the hot and cold water requirements simultaneously. It is recommended that the maximum water demand be assessed and the water supply checked to ensure this demand can be met.

NOTE: A high mains water pressure will not always guarantee high flow rates.

Wherever possible the main supply pipe should be in 28mm. The minimum mains water supply requirements should be 0.15 MPa (1.5 bar) working pressure and 50 litres per minute flowrate. If a smaller supply is used it could reduce the performance of the unit.

At these values outlet flowrates may be poor if several outlets are used simultaneously, the higher the available pressure and flowrate the better the system performance will be.

The MEGAFLO **Eco Plus** has an operating pressure of 3.5 bar which is controlled by the Cold Water Combination Valve. The Cold Water Combination Valve can be connected to a maximum mains supply pressure of 1.6 MPa (16 bar). The water supply must be of wholesome water quality (Fluid Category 1 as defined by the Water Supply Regulations 1999).

The MEGAFLO **Eco Plus** is to be used for the storage of wholesome water (max. 250mg/l chloride).

Electrical Supply

WARNING: THIS APPLIANCE MUST BE EARTHED. IT IS SUITABLE FOR A.C. SUPPLY ONLY. ELECTRICAL INSTALLATION MUST BE CARRIED OUT BY A COMPETENT ELECTRICIAN AND BE IN ACCORDANCE WITH THE LATEST I.E.E. WIRING REGULATIONS.

ENSURE THE ELECTRICAL SUPPLY IS SWITCHED OFF BEFORE MAKING ANY CONNECTIONS TO THE MEGAFLO **Eco Plus**

The Environment

This product is made from many recyclable materials, therefore at the end of its useful life it should be disposed of at a Local Authority Recycling Centre in order to realise the full environmental benefits. Insulation is by means of an approved HCFC/CFC free polyurethane foam.

Specifications and Dimensions

Outline Specifications

Maximum mains water supply pressure (to 3.5 Bar Pressure Reducing Valve)	1.6 MPa (16 bar)
Operating pressure (Pressure reducing valve set pressure – non adjustable)	0.35 MPa (3.5 bar)
Pressure Relief Valve	0.8 MPa (8 bar)
Temperature / Pressure Relief Valve set temp / pressure	90ºC / 1MPa (10 bar)
Immersion heater rating (a.c. supply only)	3kW @ 240V ~ 2.7kW @ 230V ~
Pressure drop across coils	0.002MPa (0.02 bar)
Expansion vessel pre-charge pressure	0.3MPa (3 bar)

Outer casing:

White removable jacket

Water container:

Duplex stainless steel. 100% pressure tested to 1.5 MPa (15 bar).

Thermal insulation:
CFC/HCFC free fire retardant expanded polyurethane foam with zero ozone depletion potential. It has a Global Warming Potential (GWP) of 3.1. Nominal thickness 100mm.

Pipe connections:
All connections are 1" BSP female connections to fit 28mm pipe

Safety features:

Direct units –

Manually re-settable thermal cut-out on each heating element

Factory fitted Temperature / Pressure Relief Valve

Indirect units –

Manually re-settable thermal cut-out on heating element

Manually re-settable thermal cut-out for primary heating. Must be wired in conjunction with 2-port motorised valve supplied

Factory fitted Temperature / Pressure Relief Valve

Table 1: Standing heat-loss

NOMINAL CAPACITY (LITRES)	STANDING HEAT LOSS	
	PER DAY (kWh)	PER YEAR (kWh)
400	1.72	627.8
500	2.14	781.1
570	2.44	890.5

Figure 2 - Dimensions

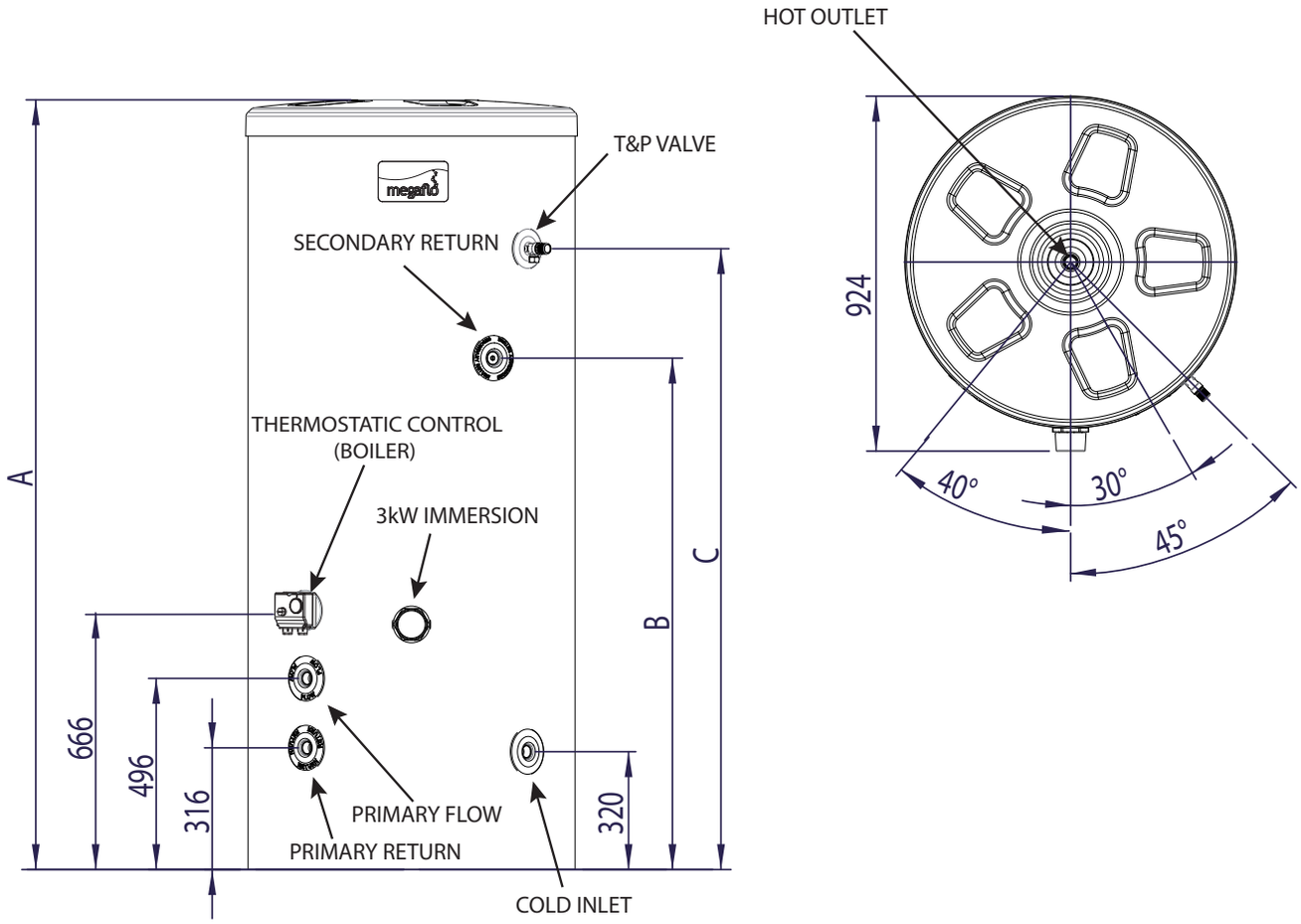

Table 2: Cylinder sizes

SIZE	TYPE		DIMENSIONS (mm)		
	DIRECT	INDIRECT	A	B	C
400L	D		1502	832	1116
400L		i	1502	832	1116
500L	D		1802	1132	1416
500L		i	1802	1132	1416
570L	D		1997	1327	1611
570L		i	1997	1436	1611

Table 3: Indirect coil ratings

NOMINAL CAPACITY (LITRES)	PRIMARY FLOW RATE L/min		
	15	30	60
400	28.2kW	41.9kW	56.9kW
500	27.6kW	40.0kW	54.3kW
570	27.0kW	39.1kW	53.6kW

Table 4: Indirect heat-up times (based on a 45°C temperature rise)

NOMINAL CAPACITY (LITRES)	PRIMARY FLOW RATE L/min		
	15	30	60
400	43 min	29 min	21 min
500	55 min	38 min	28 min
570	68 min	44 min	30 min

Figure 3 - Dimensions

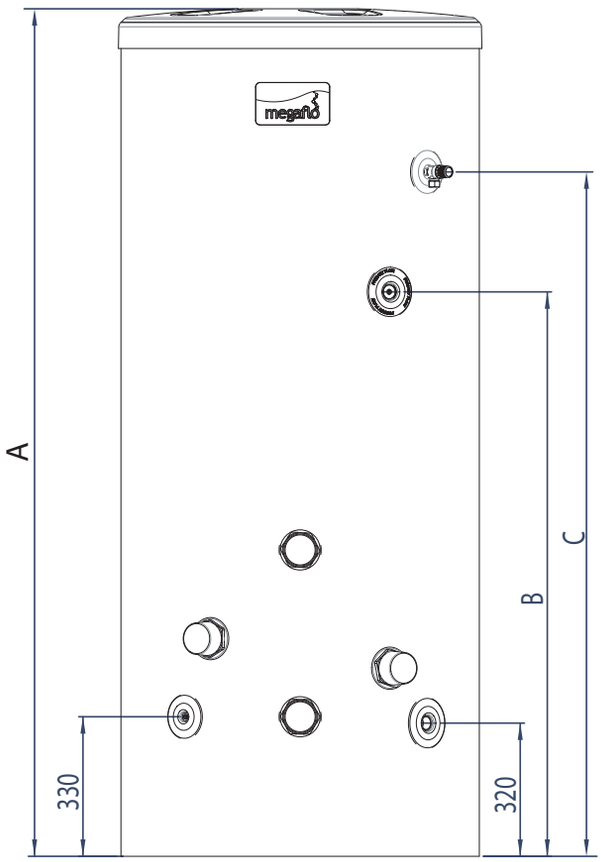

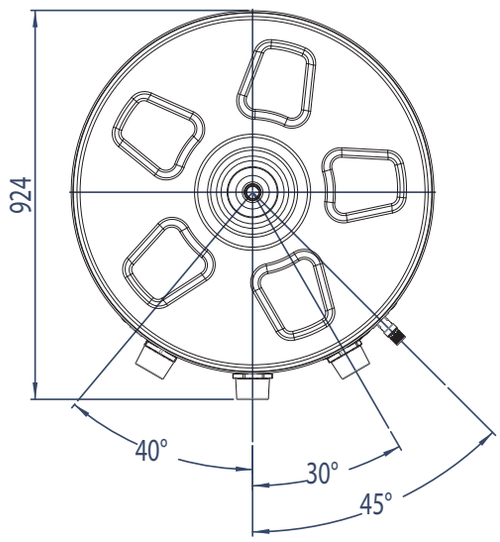

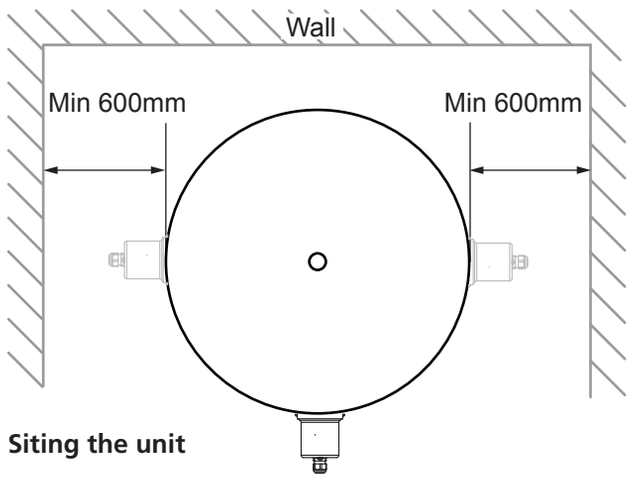

Siting the unit

Table 5: Direct units - Heat up Times

NOMINAL CAPACITY (LITRES)	HEAT-UP TIMES	
	MAXIMUM kW	HEAT-UP TIME (mins)
400	12	104.9
500	12	131.0
570	12	149.5

Times based on nominal volume
Times based on a 45°C temperature rise

Table 6: Cylinder weights

SIZE	TYPE		WEIGHTS	
	DIRECT	INDIRECT	EMPTY	FULL
400L	D		95	495
400L		i	105	505
500L	D		100	600
500L		i	110	610
570L	D		105	675
570L		i	115	685

Indirect Cylinder

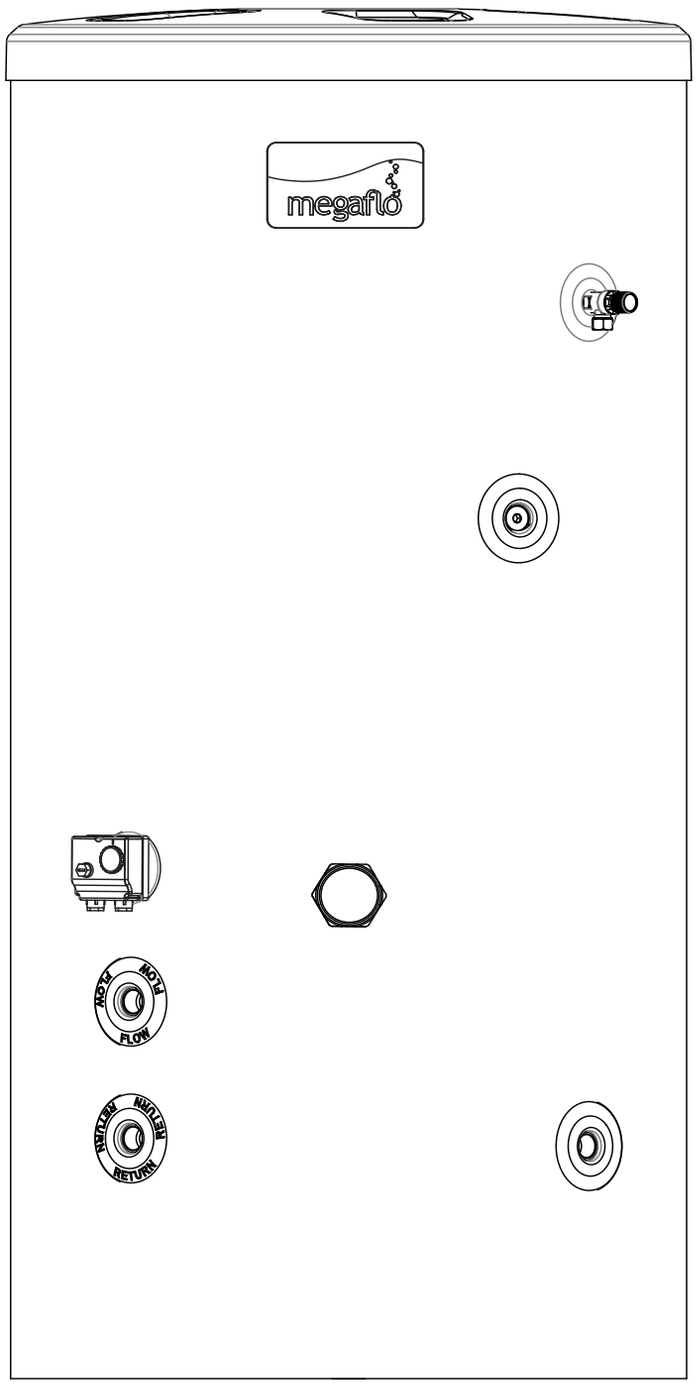

- General Installation
- Indirect Model
- Direct Model
- Commissioning

General Installation

Pipe Fittings
All pipe connections to the MEGAFLO **Eco Plus** are 1" BSP female to fit 28mm pipe.

Cold Water Supply
A 28mm cold water supply is recommended, however, if a 22mm (3/4") supply exists which provides sufficient flow (see Section1 Page 6 "Water Supply") this may be used. More flow noise may be experienced from small bore pipes due to the increased water velocity through them.

3.5 Bar Pressure Reducing Valve
The 3.5 Bar Pressure Reducing Valve can be connected anywhere on the cold water mains supply prior to the MEGAFLO **Eco Plus** unit. There is no requirement to site it close to the unit, it can be located at a point where the mains supply enters the premises if this is more convenient but you must install a non-return valve just after the reducing valve for ease of maintenance.

The 3.5 Bar Pressure Reducing Valve can be installed as a complete one-piece unit or split. The valve incorporates a factory set, non-adjustable Pressure Reducer / Strainer. The valve can be fitted in any orientation to suit the installation, however, ensure that the valve is installed with the direction of flow arrows (stamped on the side of the brass body) pointing towards the MEGAFLO **Eco Plus** heater.

8 Bar Pressure Relief Valve
This should be installed between the 3.5 bar Pressure Reducing Valve and the MEGAFLO **Eco Plus** cylinder.

Branches to drinking water outlets should be taken before the 8 Bar Pressure Relief Valve to avoid the possibility of warm expanded water being drawn from the tap.

Balanced take-off
Should a balanced pressure cold water draw off supply be required for the cold water outlets, this should be taken off between the 3.5 bar Pressure Reducing Valve and 8 bar Pressure Relief Valve (see Figure 5, page 12).

Figure 4 - Inlet valve set incorporating 3.5 pressure reducing valve

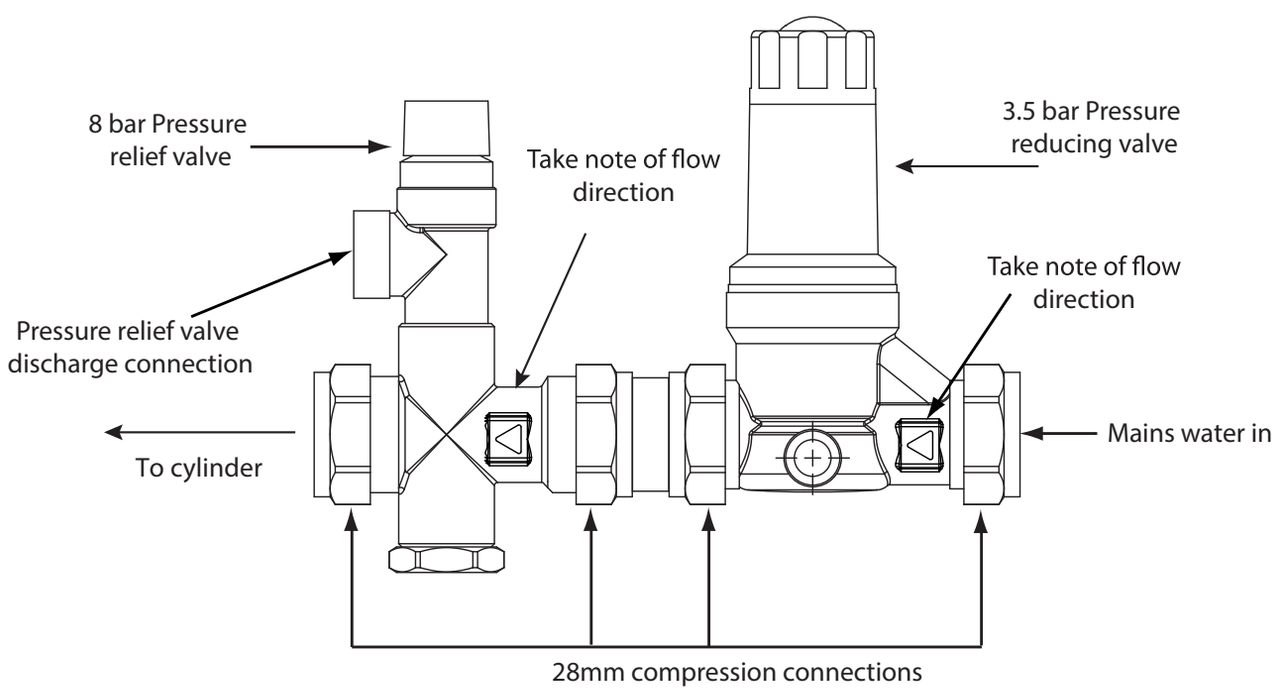

Figure 5 - Schematic Installation diagram using 3.5 bar pressure reducing valve in conjunction with 8 bar pressure relief valve

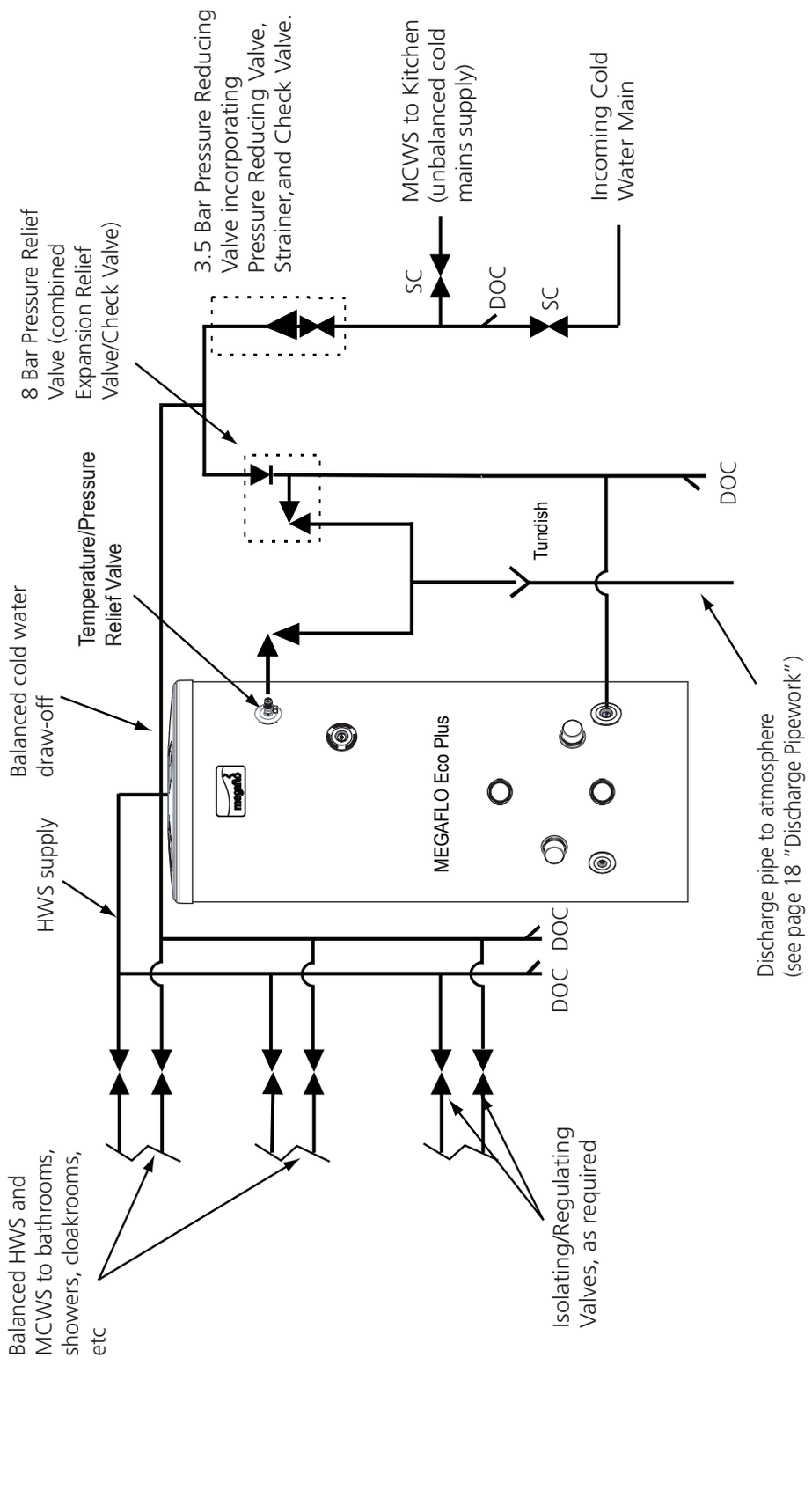

Drain Tap
A drain tap is supplied and should be installed in the cold water supply to the MEGAFLO **Eco Plus** unit between the 8 Bar Pressure Relief Valve and the heater at as low a level as possible (see Figure 1, page 5). It is recommended that the outlet point of the drain pipe work be at least 1 metre below the level of the heater (this can be achieved by attaching a hose pipe to the drain tap outlet spigot). The drain tap supplied provides very good water flow control and blanking cap for extra security.

Outlet Pipework
Ideally the pipework from the MEGAFLO **Eco Plus** to the outlet fittings should be in 28mm pipe with short runs of 22mm and 15mm pipe to showers and basin taps. Small bore pipe can also be used to suit some taps, but runs should be of minimum length. Pipe sizes may vary due to system design.

Secondary Circulation
If a secondary circulation system is required it is recommended that it be connected to the MEGAFLO **Eco Plus** as shown in Figure 6, below. The secondary return pipe should be in 22mm pipe as a minimum and incorporate a check valve to prevent backflow. A suitable WRAS approved bronze circulation pump will be required.

Note:

On large systems, due to the increase in system water content, it may be necessary to fit additional expansion volume to the secondary system by fitting an external expansion vessel to the circuit. This should be done if the capacity of the secondary circuit exceeds 10 litres.

Pipe capacities (copper)

15mm o/d = 0.13 litres per metre run (10 litres = 77m)

22mm o/d = 0.38 litres per metre run (10 litres = 26m)

28mm o/d = 0.55 litres per metre run (10 litres = 18m)

Note:

In direct electric installations where a secondary circulation is required particular attention should be paid by the installer to maintain the returning water temperature (guidelines state that a minimum of 55°C return temperature is advisable). Factors such as, but not limited to, secondary circulation flow rates, minimising heat loss of all secondary circuit pipework and timed operation during periods of high demand are critical to the correct operation and longevity of the heating element(s) and thermostats.

Figure 6 - Secondary circulation

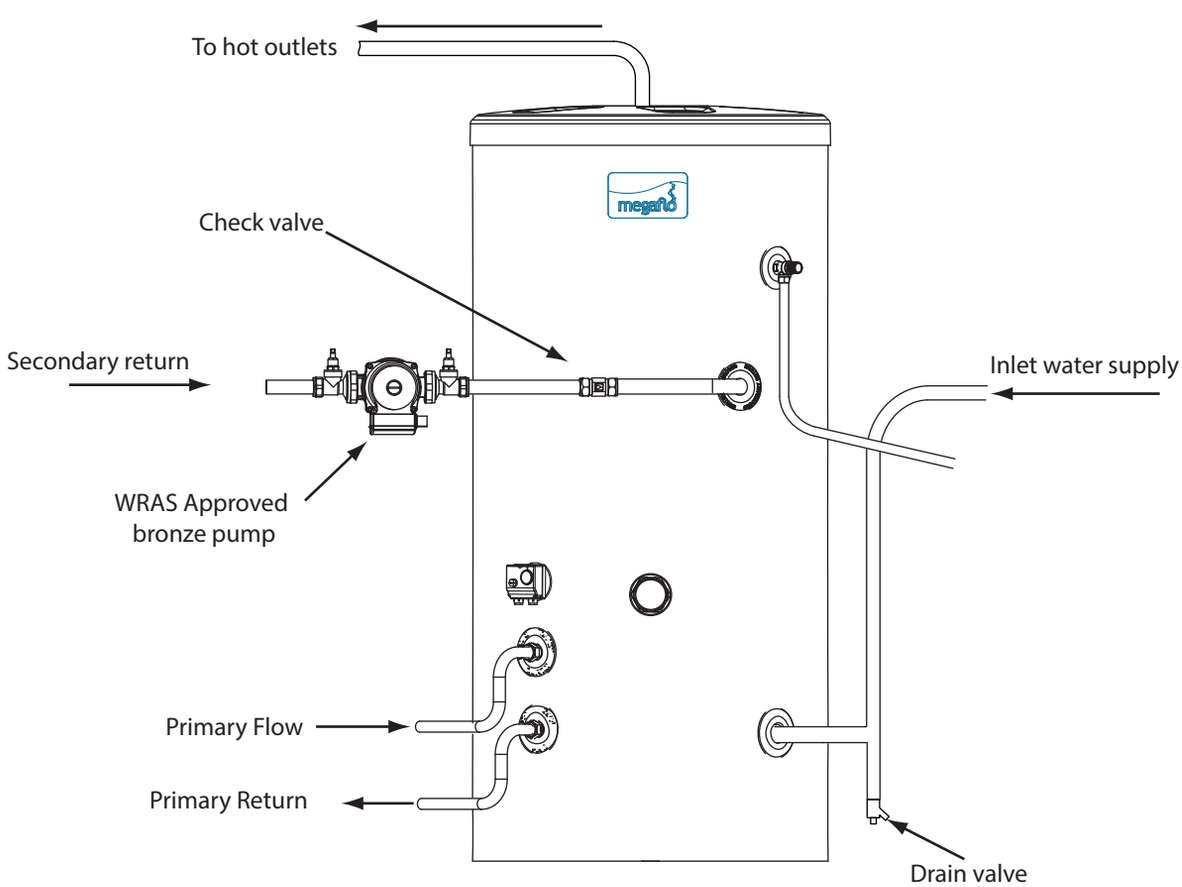

The following extract is taken from the latest G3 Regulations

Discharge pipes from safety devices

Discharge pipe D1

3.50 *Safety devices such as* **temperature relief valves** *or* **combined temperature and pressure and pressure relief valves** *(see paragraphs 3.13 or 3.18) should discharge either directly or by way of a manifold via a short length of metal pipe (D1) to a* ***tundish.***

3.51 *The diameter of discharge pipe (D1) should be not less than the nominal outlet size of the* ***temperature relief valve.***

3.52 *Where a manifold is used it should be sized to accept and discharge the total discharge form the discharge pipes connected to it.*

3.53 *Where valves other than the* ***temperature and pressure relief valve*** *from a single unvented hot water system discharge by way of the same manifold that is used by the safety devices, the manifold should be factory fitted as part of the* ***hot water storage system unit*** *or package.*

Tundish

3.54 *The* ***tundish*** *should be vertical, located in the same space as the unvented* ***hot water storage system*** *and be fitted as close as possible to, and lower than, the valve, with no more than 600mm of pipe between the valve outlet and the* ***tundish*** *(see Diagram 1).*

Note: *To comply with the Water Supply (Water Fittings) Regulations, the* ***tundish*** *should incorporate a suitable air gap.*

3.55 *Any discharge should be visible at the* ***tundish****. In addition, where discharges from safety devices may not be apparent, e.g. in dwellings occupied by people with impaired vision or mobility, consideration should be given to the installation of a suitable safety device to warn when discharge takes place, e.g. electronically operated.*

Discharge pipe D2

3.56 *The discharge pipe (D2) from the* ***tundish*** *should:*

(a) have a vertical section of pipe at least 300mm long below the ***tundish*** *before any elbows or bends in the pipework (see Diagram 1); and*
(b) be installed with a continuous fall thereafter of at least 1 in 200.

3.57 *The discharge pipe (D2) should be made of:*
(a) metal; or
(b) other material that has been demonstrated to be capable of safely withstanding temperatures of the water discharged and is clearly and permanently marked to identify the product and performance standard (e.g. as specified in the relevant part of BS 7291).

3.58 *The discharge pipe (D2) should be at least one pipe size larger than the nominal outlet size of the safety device unless its total equivalent hydraulic resistance exceeds that of a straight pipe 9m long, i.e. for discharge pipes between 9m and 18m the equivalent resistance length should be at least two sizes larger than the nominal outlet size of the safety device; between 18 and 27m at least 3 sizes larger, and so on; bends must be taken into account in calculating the flow resistance.*
See Diagram 1, Table 1 and the worked example.

Note: *An alternative approach for sizing discharge pipes would be to follow Annex D, section D.2 of BS 6700:2006 Specification for design, installation, testing and maintenance of services supplying water for domestic use within buildings and their curtilages.*

3.59 *Where a single common discharge pipe serves more than one system, it should be at least one pipe size larger than the largest individual discharge pipe (D2) to be connected.*

3.60 *The discharge pipe should not be connected to a soil discharge stack unless it can be demonstrated that that the soil discharge stack is capable of safely withstanding temperatures of the water discharged, in which case, it should:*

(a) contain a mechanical seal, not incorporating a water trap, which allows water into the branch pipe without allowing foul air from the drain to be ventilated through the ***tundish****;*
(b) be a separate branch pipe with no ***sanitary appliances*** *connected to it;*
(c) if plastic pipes are used as branch pipes carrying discharge from a safety device they should be either polybutalene (PB) to Class S of BS 7291-2:2006 or cross linked polyethylene (PE-X) to Class S of BS 7291-3:2006; and
(d) be continuously marked with a warning that no ***sanitary appliances*** *should be connected to the pipe.*

Note:

1. Plastic pipes should be joined and assembled with fittings appropriate to the circumstances in which they are used as set out in BS EN ISO 1043-1.
2. Where pipes cannot be connected to the stack it may be possible to route a dedicated pipe alongside or in close proximity to the discharge stack.

Termination of discharge pipe

3.61 *The discharge pipe (D2) from the* ***tundish*** *should terminate in a safe place where there is no risk to persons in the vicinity of the discharge.*

3.62 *Examples of acceptable discharge arrangements are:*
b) to a trapped gully with the end of the pipe below a fixed grating and above the water seal;
(c) downward discharges at low level; i.e. up to 100mm above external surfaces such as car parks, hard standings, grassed areas etc. are acceptable providing that a wire cage or similar guard is positioned to prevent contact, whilst maintaining visibility; and
(d) discharges at high level: e.g. into a metal hopper and metal downpipe with the end of the discharge pipe clearly visible or onto a roof capable of withstanding high temperature discharges of water and 3m from any plastic guttering system that would collect such discharges.

3.63 *The discharge would consist of high temperature water and steam. Asphalt, roofing felt and non-metallic rainwater goods may be damaged by such discharges.*

Notes:

1) Discharge pipe-work D2 can now be a plastic pipe but only pipes that have been tested to a minimum110°C must be used.

2) Discharge pipe D2 can now be plumbed in the soil stack but only soil stacks that can handle temperatures of 99°C or greater should be used.

3) The tundish must be installed away from any electrical components.

Discharge Pipework

It is a requirement of Building Regulations that any discharge from an unvented system is conveyed to where it is visible, but will not cause danger to persons in or about the building. The tundish and discharge pipes should be fitted in accordance with the requirements and guidance notes of Building Regulations. Building Regulation G3 Requirements and Guidance section 2 (page 17) are reproduced in the following sections.

For discharge pipe arrangements not covered by G3 Guidance advice should be sought from your local Building Control Officer. Any discharge pipe connected to the pressure relief devices (Expansion Valve and Temperature / Pressure Relief Valve) must be installed in a continuously downward direction and in a frost free environment.

The water may drip from the discharge pipe of the pressure relief device and that this pipe must be left open to the atmosphere. The pressure relief device is to be operated regularly to remove lime deposits and to verify that it is not blocked.

G3 Requirement

"...there shall be precautions...to ensure that the hot water discharged from safety devices is safely conveyed to where it is visible but will not cause danger to persons in or about the building".

VALVE OUTLET SIZE	MINIMUM SIZE OF DISCHARGE PIPE D1	MINIMUM SIZE OF DISCHARGE PIPE D2 FROM TUNDISH	MAXIMUM RESISTANCE ALLOWED, EXPRESSED AS A LENGTH OF STRAIGHT PIPE (I.E. NO ELBOWS OR BENDS	RESISTANCE CREATED BY EACH ELBOW OR BEND
G 1/2	15mm	22mm 28mm 35mm	UP TO 9m UP TO 18m UP TO 27m	0.8m 1.0m 1.4m
G 3/4	22mm	28mm 35mm 42mm	UP TO 9m UP TO 18m UP TO 27m	1.0m 1.4m 1.7m
G 1	28mm	35mm 42mm 54mm	UP TO 9m UP TO 18m UP TO 27m	1.4m 1.7m 2.3m

Figure 7 - D1 and D2 schematic

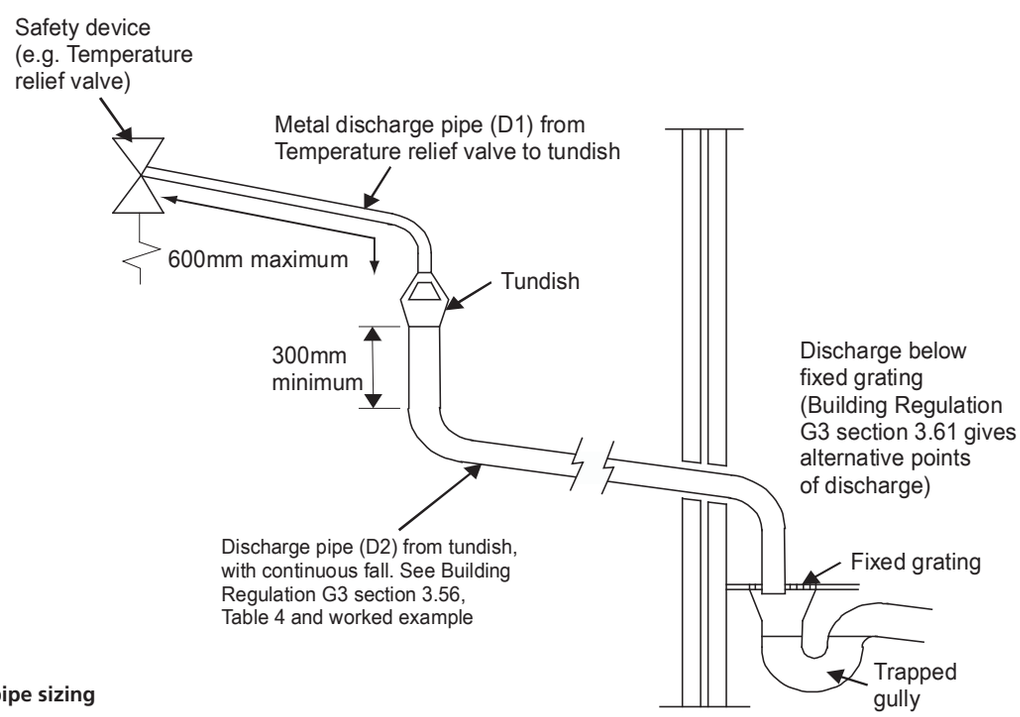

Worked example of discharge pipe sizing

The example on page 18 (G3 Guidance notes) is for a G½ temperature relief valve with a discharge pipe (D2) having 4 No. elbows and length of 7m from the tundish to the point of discharge.

From Table 5:

Maximum resistance allowed for a straight length of 22mm copper discharge pipe (D2) from a G½ temperature relief valve is 9m.

Subtract the resistance for 4 No. 22mm elbows at 0.8m each = 3.2m

Therefore the permitted length equates to: 5.8m

5.8m is less than the actual length of 7m therefore calculate the next largest size.

Maximum resistance allowed for a straight length of 28mm pipe (D2) from a G½ temperature relief valve equates to 18m.

Subtract the resistance of 4 No. 28mm elbows at 1m each = 4m

Therefore the maximum permitted length equates to: 14m

As the actual length is 7m, a 28mm (D2) copper pipe will be satisfactory.

Indirect Model

Boiler Selection

The MEGAFLO **Eco Plus** Indirect models are suitable for use with most gas or oil fired boilers compatible with unvented systems i.e. fitted with a temperature control thermostat and thermal cut-out. If in doubt consult the boiler manufacturer. Solid fuel boilers or any other boiler in which the energy input is not under effective thermostatic control, unless additional and appropriate safety measures are installed, **SHOULD NOT** be used. The boiler used can either be a sealed system or open vented type, maximum primary circuit pressure 3 bar. The primary flow from the boiler **MUST** be pumped. Gravity circulation will not work due to the special design of the primary heat exchanger. It is recommended that an air bleed point or automatic air vent is incorporated in the primary return pipework close to the MEGAFLO **Eco Plus** unit. The boiler flow temperature should usually be set to 82ºC (maximum flow temperature to primary heat exchanger 89ºC). The boiler cannot be vented through the MEGAFLO **Eco Plus** unit.

Indirect Thermal Cut-Out And 2-Port Motorised Valve

To comply with Building Regulations, and to prevent the MEGAFLO **Eco Plus** from overheating the 2-port motorised valve supplied **MUST** be fitted to the primary flow to the indirect coil (see Figure 8 below).

Figure 8 - Indirect connections

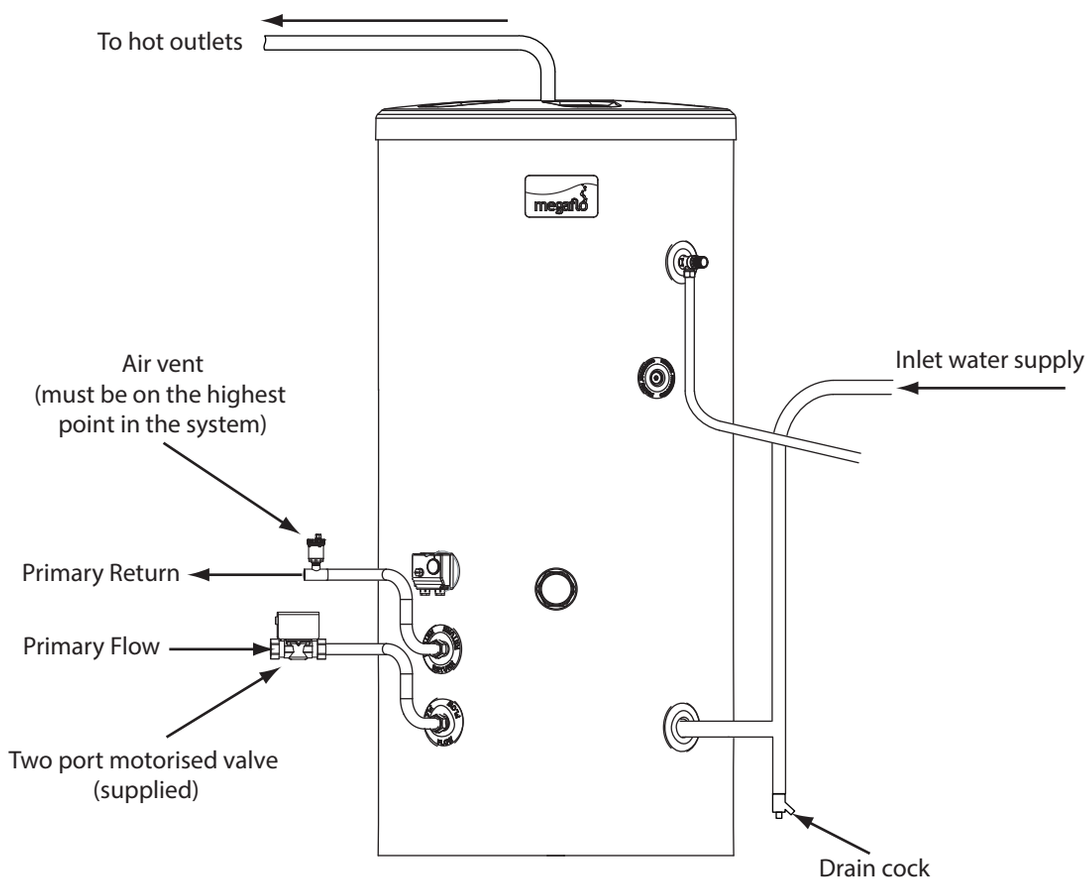

Wiring

All electrical wiring should be carried out by a competent electrician and be in accordance with the latest I.E.E. Wiring Regulations.

The 2-port motorised valve supplied **MUST** be wired in series with the Indirect controls such that the power supply to the valve is interrupted should either the Thermostat or Thermal cut-out operate. The Figures 10 and 11 (page 18) detail the wiring required between these controls and the motorised valve. Wiring to external controls is made via the terminal block fitted. The cable should be routed through the aperture in the terminal cover and secured using the cable grip provided. **The Indirect Thermal cut-out MUST NOT be bypassed.**

Heating System Controls

The controls provided with the MEGAFLO **Eco Plus** will ensure the safe operation of the MEGAFLO **Eco Plus** within a central heating system. Other controls will be necessary to control the space heating requirements and times that the system is required to function. Depending on the boiler selected, heating circuit design and controls used, it may be beneficial to incorporate a system bypass in the heating system pipework.

The MEGAFLO **Eco Plus** is compatible with most heating controls, examples of electrical circuits are given in Figures 10 and 11, page 18. However, other systems may be suitable, **refer to the controls manufacturers' instructions, supplied with the controls selected, for alternative system wiring schemes.**

Immersion Heater

The MEGAFLO **Eco Plus** indirect units are supplied with an immersion heater which can be used as an alternative heat source should the boiler supply need to be isolated from the MEGAFLO **Eco Plus** unit. The immersion heater must be wired to the latest I.E.E. Wiring regulations

Figure 9 - Indirect wiring schematic and control adjustment

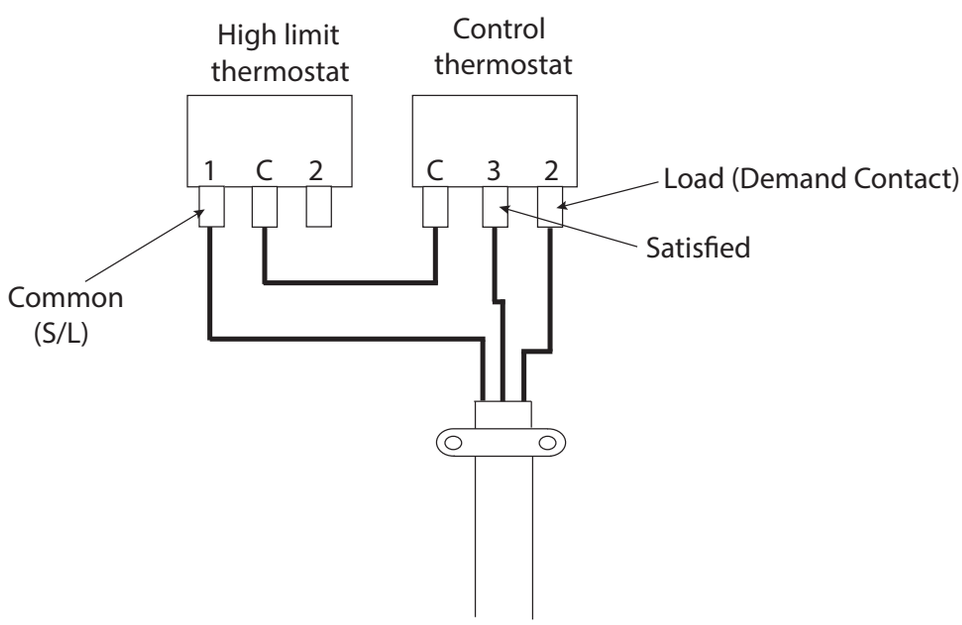

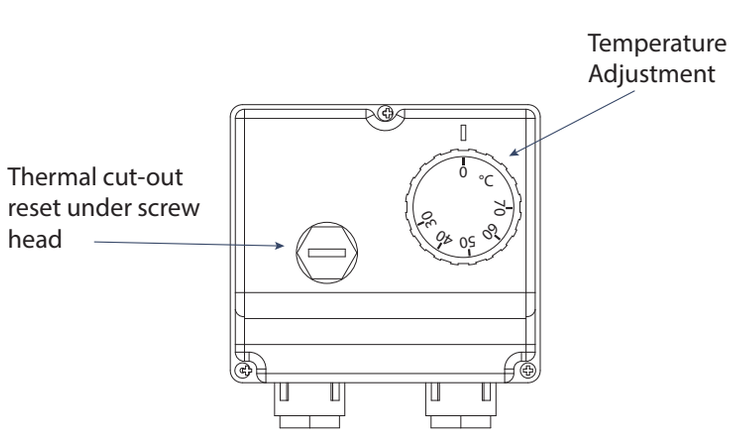

Figure 10 - 2 port valve in conjunction with a 3 port mid-position valve system ("Y" Plan)

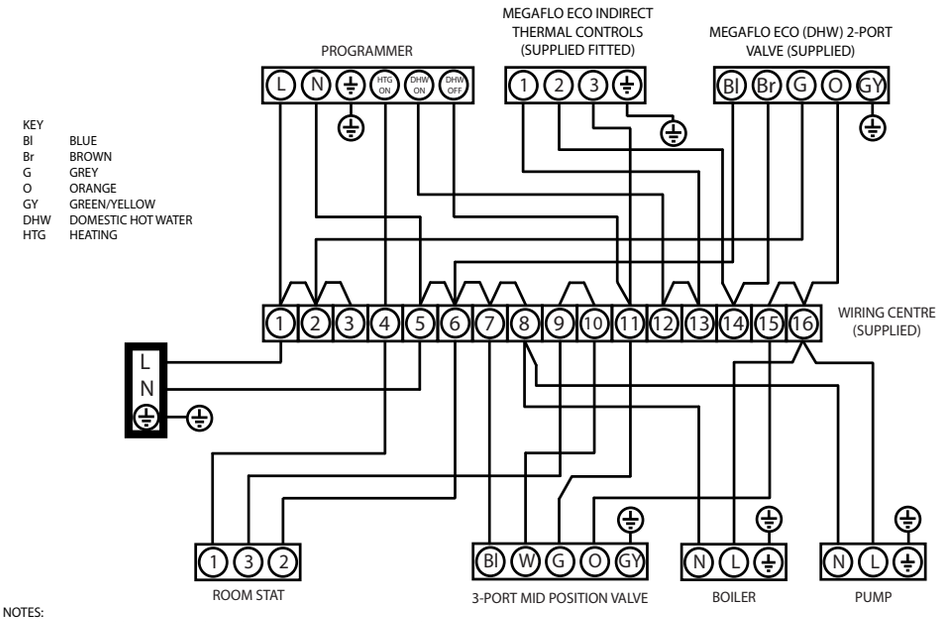

NOTES:
1. A DOUBLE POLE ISOLATING SWITCH MUST BE INSTALLED IN THE MAINS SUPPLY.
2. ALL EARTH CONNECTIONS MUST BE LINKED BACK TO THE MAINS EARTH SUPPLY.
3. ASSUMES BASIC BOILER WITH EXTERNAL PUMP.
4. USE COPPER LINKS SUPPLIED TO MAKE CONNECTIONS BETWEEN TERMINALS.
5. DO NOT MOUNT WIRING CENTRE ON CYLINDER.
6. THE ABOVE DIAGRAM IS FOR GUIDANCE ONLY, HEATRAE SADIA ACCEPT NO LIABILITY FOR ANY LOSS OR DAMAGE ARISING FROM ANY ERRORS OR OMISSIONS. THAT MAY BE INADVERTENTLY CONTAINED WITHIN THIS DIAGRAM. THE VARIOUS EQUIPMENT MANUFACTURERS SHOULD BE CONSULTED TO CONFIRM THE CORRECT OPERATION OF THEIR PRODUCTS WITHIN THE SYSTEM.

Figure 11 - 2 x 2 port valve system ("S"Plan)

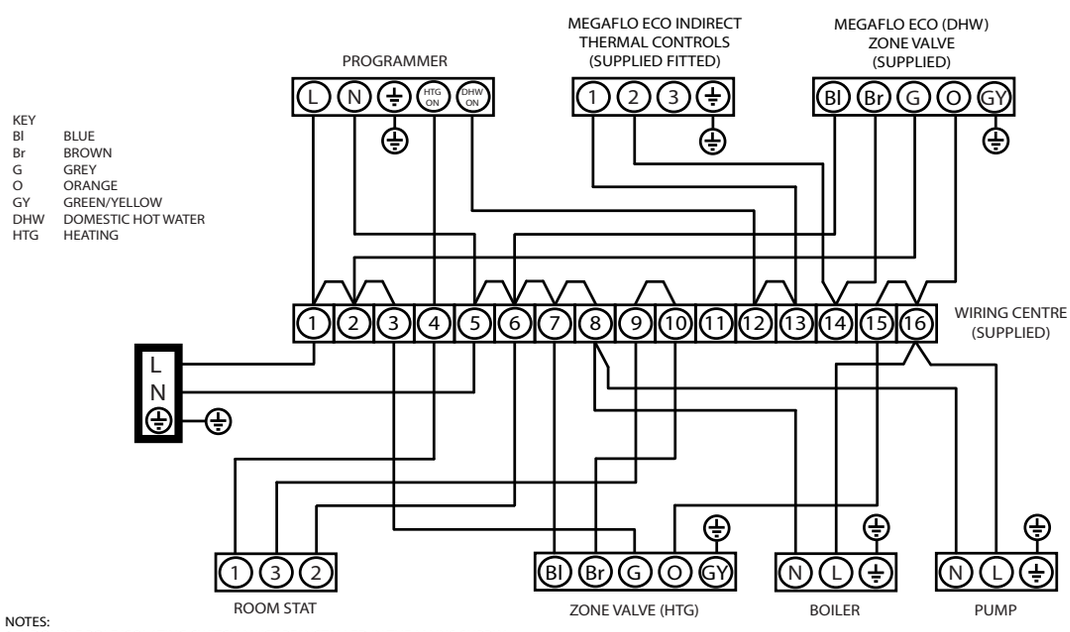

NOTES:
1. A DOUBLE POLE ISOLATING SWITCH MUST BE INSTALLED IN THE MAINS SUPPLY.
2. ALL EARTH CONNECTIONS MUST BE LINKED BACK TO THE MAINS EARTH SUPPLY.
3. USE COPPER LINKS SUPPLIED TO MAKE CONNECTIONS BETWEEN TERMINALS.
4. DO NOT MOUNT WIRING CENTRE ON CYLINDER.
5. THE ABOVE DIAGRAM IS FOR GUIDANCE ONLY, HEATRAE SADIA ACCEPT NO LIABILITY FOR ANY LOSS OR DAMAGE ARISING FROM ANY ERRORS OR OMISSIONS. THAT MAY BE INADVERTENTLY CONTAINED WITHIN THIS DIAGRAM. THE VARIOUS EQUIPMENT MANUFACTURERS SHOULD BE CONSULTED TO CONFIRM THE CORRECT OPERATION OF THEIR PRODUCTS WITHIN THE SYSTEM.

Direct Model

Immersion Heater(s)

The MEGAFLO **Eco Plus** is supplied with four factory fitted immersion heaters. Each immersion heater is rated 3kW at 240V.

To remove the immersion heater:

Disconnect the immersion from the mains electrical circuit and make sure the cylinder is completely drained down. Remove the immersion cover and disconnect the wiring from the thermostat. Withdraw the thermostat from the immersion heater and put aside. With the aid of a large box spanner unscrew the immersion heater from the cylinder. No attempt should be made by the end user to remove the immersion heater (or any other device) from this cylinder. This must be done by a qualified person.

Replacement

Before replacement make sure the boss thread is clean and free from any debris. Make sure the "O" ring on the immersion heater is in place and in good condition. Screw in the immersion heater making a watertight seal. Replace the thermostat making sure the pins align with the female receptacles on the immersion heater. Refill the cylinder with water and check for leaks. Connect up the Immersion heater to the electrical supply. Turn on the supply and set the thermostat to the desired water temperature (60°C - 65°C is recommended).

Wiring (See Figure 12)

All electrical wiring should be carried out by a competent electrician and be in accordance with the latest I.E.E. Wiring Regulations. **Each circuit must be protected by a suitable fuse and double pole isolating switch with a contact separation of at least 3mm in both poles.** The immersion heater(s) should be wired in accordance with Figure 12, page 19 . The immersion heaters MUST be earthed. The supply cable should be 1.5mm² 3 core HOFR sheathed and must be routed through the cable gland provided with the outer sheath of the cable firmly secured by tightening the screw on the cable gland. Replace the immersion heater cover(s) before operating ensuring that the threaded edge clip is in position to provide a suitable thread for the cover screw.

DO NOT OPERATE THE IMMERSION HEATER(S) UNTIL THE MEGAFLO **Eco Plus HAS BEEN FILLED WITH WATER.**

Operation

It is recommended that the immersion heater thermostats are set to between position 4 and 5 (60° - 65°C), however they can be set between 1 and 5 (10° and 70°C). The thermostat incorporates a thermal cut-out that will switch off the immersion heater in the event of a thermostat failure. The thermal cut-out reset button position is indicated on Diagram 13. DO NOT bypass the thermal cut-out in any circumstances.

Figure 12 - Direct wiring schematic

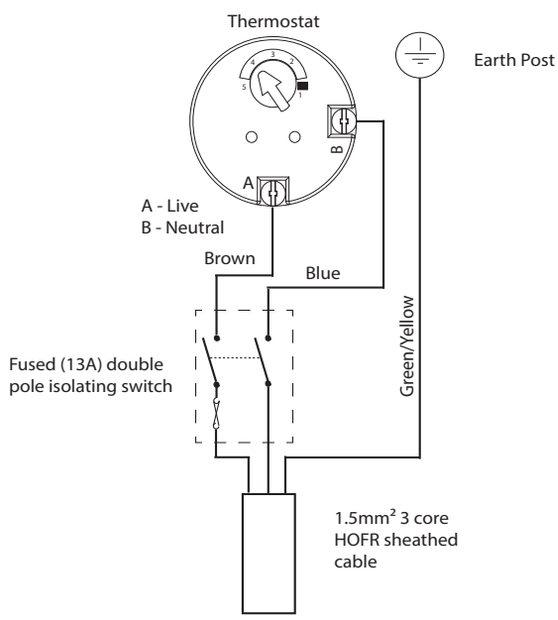

Figure 13 - Adjustment details

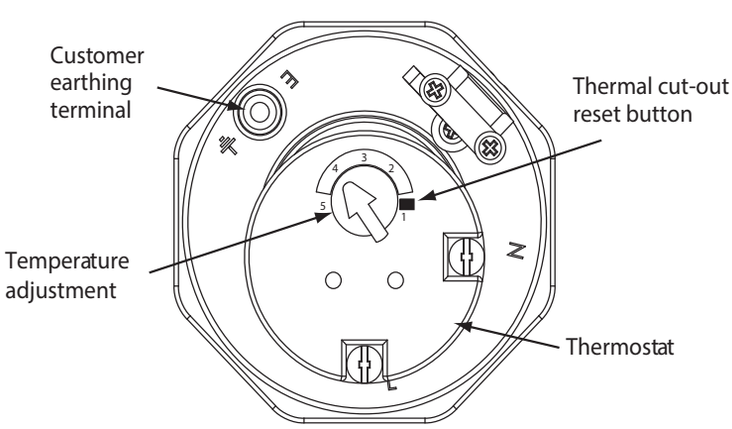

Commissioning

Filling and flushing the MEGAFLO **Eco Plus**

Ensure that all fittings and immersion heaters are correctly fitted and tightened.

i) Open a hot tap furthest from the MEGAFLO **Eco Plus**.

ii) Open the isolating valve on the 3.5 Bar Pressure Reducing Valve by turning the blue handle on the stop cock (if fitted in this position) so that it lies parallel to the direction of flow. Open the mains stop cock to fill the unit. When water discharges from the tap, allow to run for a few minutes to thoroughly flush through any residue, dirt or swarf, then close tap.

iii) Open successive hot taps to purge any air from the system.

iv) Check all connections for leaks and rectify as necessary.

v) The Strainer housed within the 3.5 Bar Pressure Reducing Valve should be cleaned to remove any debris that may have been flushed through the main supply pipe. Refer to Section 3, Page 22 for instructions on how to do this.

Check the operation of the Safety Valves

i) Slowly, manually open (turn black knob on end counter-clockwise), for a few seconds, the Temperature and Pressure Relief Valve (T&P Valve) situated on the MEGAFLO **Eco Plus** unit (see Figure 1, page 5). Check water discharged runs freely away through the tundish and discharge pipework. Close valve, ensure water flow stops and valve reseats correctly.

ii) Repeat for the 8 Bar Pressure Relief Valve (see Figure 4, page 11).

Direct Units

Switch on the electrical supply to the immersion heater(s) and allow the unit to heat up. Check that the thermostat operates correctly. A storage temperature of approx. 60°C is recommended (between graduations 4 and 5 on the thermostat). If necessary the temperature can be adjusted by inserting a flat bladed screwdriver in the adjustment arrow on top of the immersion heater thermostat and rotating (see Fig 13, page 19). The adjustment range 1 to 5 represents a temperature range of between 10° and 70°C.

Check that no water is discharged from either the Expansion Valve or Temperature and Pressure Relief Valve during the heating cycle.

Indirect Units

Fill the indirect (primary) circuit following the boiler manufacturer's commissioning instructions. To ensure the primary heating coil in the MEGAFLO **Eco Plus** is filled the 2-port motorised valve (supplied) should be manually opened by moving the lever on the motor housing to the **MAN OPEN** position. When the primary circuit is full return the lever to the **AUTO** position. Vent any trapped air by opening the air bleed.

Switch on the boiler, ensure the programmer is set to Domestic Hot Water. Allow the MEGAFLO **Eco Plus** unit to heat up and check that the indirect thermostat and 2-port motorised valve operate correctly. A storage temperature of approx. 60°C is recommended. The teperature can be adjusted by turning the knob on the temperature controller to the required temperature, (see Fig 9, page 17)

Check that no water is discharged from either the Expansion Valve or Temperature and Pressure Relief Valve during the heating cycle.

Benchmark™ Log Book

On completion of the installation and commissioning procedures detailed in this manual the Benchmark™ "Installation, Commissioning and Service Record Log, pages 26 and 27 should be completed and signed off by the competent installer or commissioning engineer in the relevant sections. The various system features, location of system controls, user instructions and what to do in the event of a system failure should be explained to the customer. The customer should then countersign the Benchmark™ commissioning checklist (page 26) to accept completion. The Service Record should be filled in when any subsequent service or maintenance operation is carried out on the MEGAFLO **Eco Plus** unit (See Maintenance and Servicing, page 27).

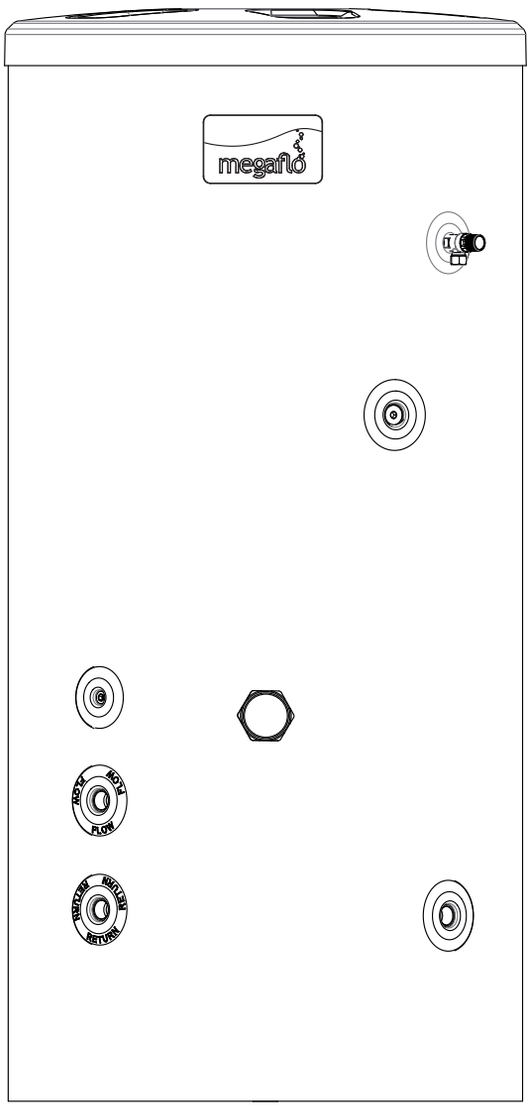

- Maintenance
- Fault Finding
- Servicing
- Spares
- Benchmark
- Spares stockists

Maintenance

Maintenance requirements

To ensure the continued optimum performance of the MEGAFLO **Eco Plus** it should be regularly maintained. This is of particular importance in hard water areas or where the water supply contains particulate matter. Maintenance should be carried out by a competent person and any replacement parts used should be authorised MEGAFLO **Eco Plus** spare parts. It is recommended that maintenance is carried out every 12 months and includes the checks detailed below.

In hard water areas consideration should be given to periodically de scaling the immersion heater elements. To do this the MEGAFLO **Eco Plus** unit will need to be drained, details below list how to drain the unit and remove the immersion heater(s).

Check operation of Safety Valves

Slowly open the Temperature and Pressure Relief Valve by twisting its cap for a few seconds. Check water is discharged and that it flows freely through the tundish and discharge pipe work. Check valve reseats correctly when released.

NOTE: The water discharged may be very hot.

Repeat the procedure for the 8 Bar Pressure Relief Valve.

Clean the strainer

The strainer is incorporated within the Pressure Reducing Valve housing of the Cold Water Combination Valve (see Figure 4, Page 11). To inspect and clean the strainer:

i) Turn off the isolating valve to the 3.5 Bar Pressure Reducing Valve or the main stop cock to the house.

ii) Open the lowest hot tap in the system to relieve the system pressure.

iii) Using a spanner unscrew the pressure reducing cartridge and remove the moulded housing. The strainer will be removed with the cartridge.

iv) Wash any particulate matter from the strainer under clean running water.

v) Replace the strainer and screw the Pressure Reducing Valve cartridge into the moulded housing.

vi) Close hot tap, turn on isolating valve by turning handle so it lies parallel to the direction of flow. Check for leaks.

Draining the MEGAFLO **Eco Plus unit**

Switch off the electrical supply to the immersion heater(s) and shut down the boiler on indirect units. Turn off the mains water supply to the MEGAFLO **Eco Plus** unit. Attach a hosepipe to the drain cock having sufficient length to take water to a suitable discharge point below the level of the unit, at least one metre below the unit is recommended. Open hot water tap nearest to the MEGAFLO **Eco Plus** to relieve the system pressure. Open drain cock. If water fails to drain from the MEGAFLO **Eco Plus** vent the unit by manually opening the Temperature / Pressure Relief Valve.

De-scaling immersion heater(s)

After making sure the electrical supply has been switched off and the cylinder drained down remove the cover to the immersion heater and disconnect the power cable. With a suitable tool unscrew the immersion from the housing. Take care of the "O" ring on the immersion housing and replace if worn.

Carefully remove any scale from the surface of the element(s). **DO NOT** use a sharp implement as damage to the element surface could be caused. Ensure sealing surfaces are clean and seals are undamaged, if in doubt fit a new gasket.

To refit the element make sure the housing is clean and free from any contamination, screw the element in, taking care not to damage the "O" ring. If more than one element has been removed repeat the operation until all elements have be replaced. Refill the cylinder and check for leaks. Rewire the elements as per Fig 12, page19. Close and secure terminal cover(s).

Note:

If the cylinder needs to be inspected internally this can be done via the immersion heater boss.

Refilling system

DO NOT switch on the immersion heater(s) or boiler until the system has been completely refilled.

Close the drain tap. With the hot tap open, turn on mains water supply. When water flows from the hot tap allow to flow for a short while to purge air and to flush through any disturbed particles. Close hot tap and then open successive hot taps in system to purge any air. The electrical supply can now be switched on.

Benchmark™

On completion of any maintenance or service of the MEGAFLO **Eco Plus**, the Benchmark™ "Installation, Commissioning and Service Record" should be filled in to record the actions taken and the date the work was undertaken.

Servicing

Important

i) Servicing should only be carried by authorised Baxi Customer Support engineers, Agents or by installers competent in the installation and maintenance of unvented water heating systems.

ii) Any spare parts used MUST be authorised MEGAFLO **Eco Plus** parts.

iii) Disconnect the electrical supply before removing any electrical equipment covers.

iv) NEVER bypass any thermal controls or operate system without the necessary safety valves.

v) Water contained in the MEGAFLO **Eco Plus** unit may be very hot, especially following a thermal control failure. Caution must be taken when drawing water from the unit.

Spares

Spare parts

A full range of spare parts are available for the MEGAFLO **Eco Plus** range. Refer to the Technical Data label on the unit to identify the model installed and ensure the correct part is ordered.

Description	Part no.
Integrated inlet control valve set (28mm)	95:605:104
Pressure reducing valve (3.5 bar, 28mm)	95:605:105
Pressure relief valve (8 bar, 28mm)	95:605:107
Pressure relief valve cartridge	95:605:108
3kW element (1 3/4" screw thread)	95:602:030
3/4" Temperature/Pressure relief valve	95:605:103
TSR combined thermostat and cut-out	95:612:026
Expansion vessel (35L)	95:607:438
Expansion vessel bracket	95:607:444
Tundish (22mm - 28mm)	95:607:367
2 port motorised valve (28mm)	95:605:884
Dual temperature and thermal cut-out(indirect)	95:612:650
Isolating ball valve 1"	95:605:178
Isolating drain valve 1"	95:605:182

Figure 14 - Spares schematic

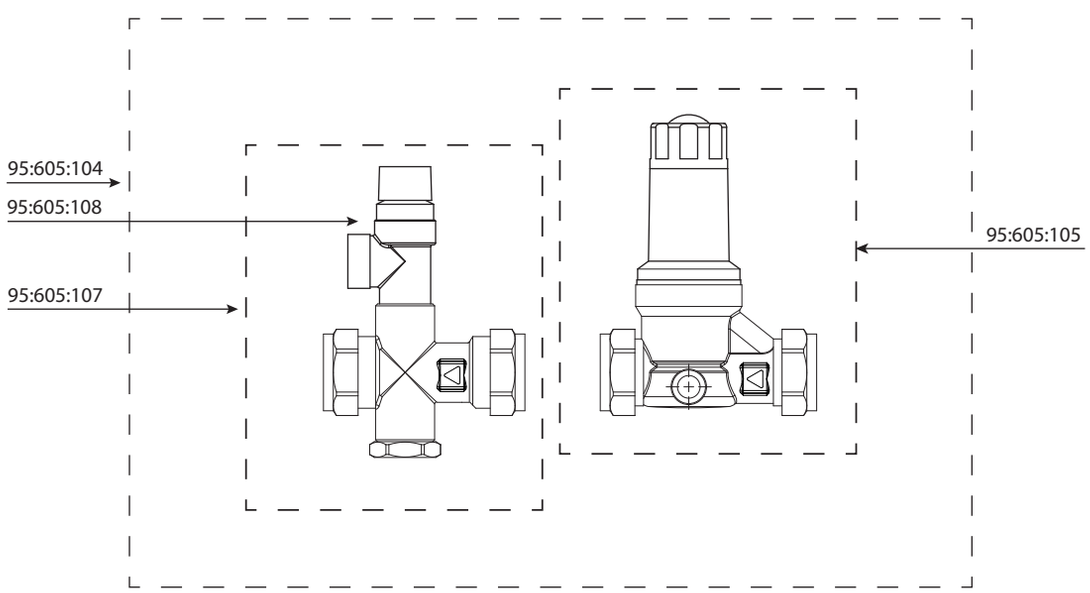

Figure 15 - Spares schematic

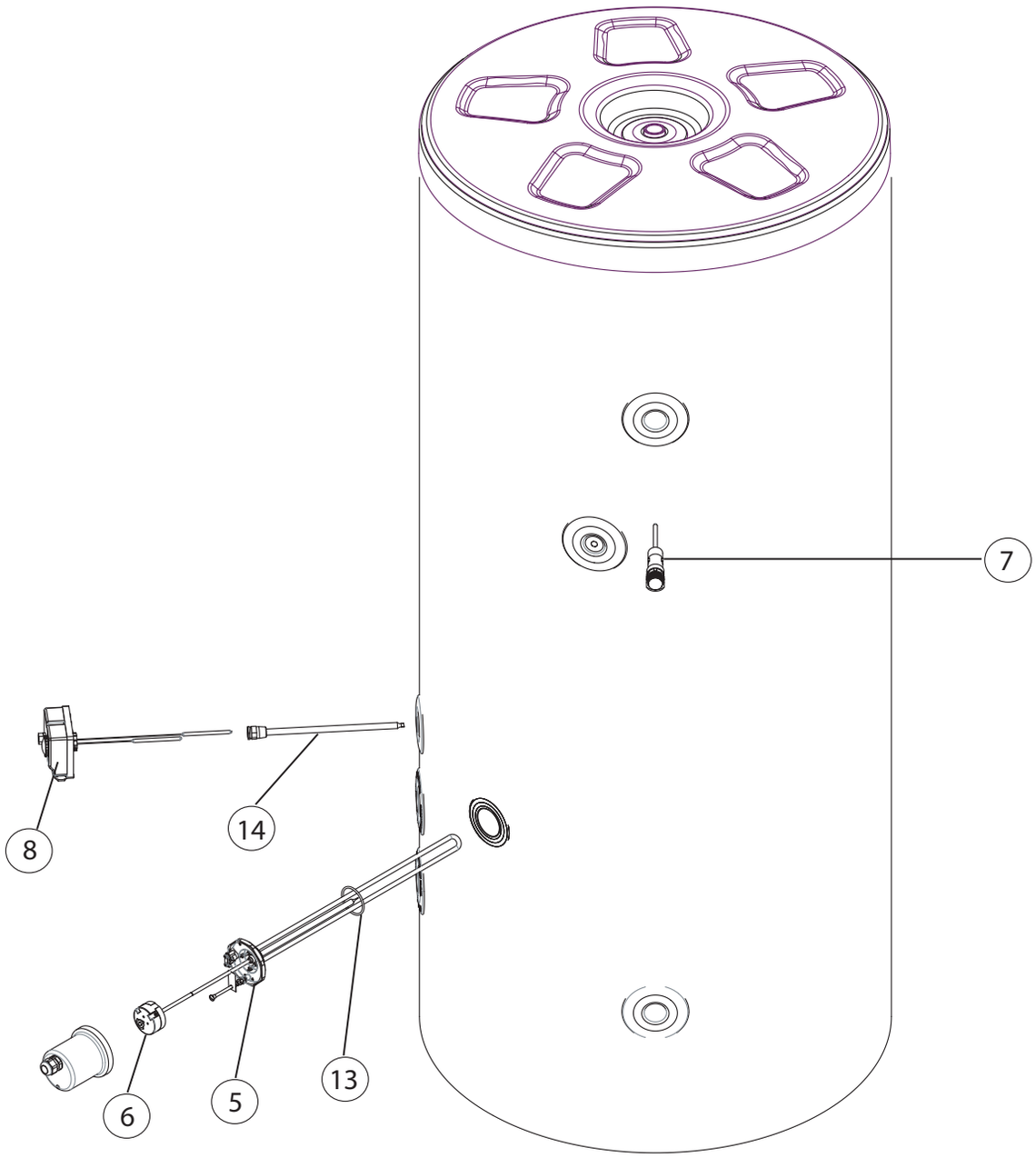

Fault finding

The Fault Finding chart (Table 8) will enable operational faults to be identified and their possible causes rectified. Any work carried out on the MEGAFLO **Eco Plus** unvented water heater and its associated controls MUST be carried out by a competent installer for unvented water heating systems. In case of doubt contact the MEGAFLO **Eco Plus** Service Department , Section 4, page 32.

Table 8 - Fault Finding Chart

FAULT	POSSIBLE CAUSE	REMEDY
No hot water flow	1. Mains water supply off.	1. Check and open stop cock.
	2. Strainer blocked.	2. Turn off water supply. Remove strainer and clean (see page 22).
	3. Cold Water Combination Valve incorrectly fitted.	3. Check and refit as required.
Water from hot taps is cold	1. Immersion heater (Direct) not switched on.	1. Check and switch on.
	2 Immersion heater (Direct) thermal cut-out has operated.	2. Check. Reset by pushing button. (Figure 13, page 19)
	3. INDIRECT programmer set to Central Heating only.	3. Check. Set to a Domestic Hot Water programme.
	4. INDIRECT boiler not working.	4. Check boiler operation. If fault is suspected consult boiler manufacturer's instructions.
	5. INDIRECT thermal cut-out has operated.	5. Check. Reset by pushing button on cut-out. Check operation of indirect thermostat (Figure 9, page 17).
	6. INDIRECT motorised valve not connected correctly.	6. Check wiring and/or plumbing connections to motorised valve (see Fig 10 and 11).
Water discharges from 8Bar Expansion Valve	1. INTERMITTENTLY Air Volume in expansion vessel has reduced	1. See Page 30 (Operational Faults)
	2. CONTINUALLY a. 3.5 Bar Pressure Reducing Valve not working correctly b. Expansion Valve seat damaged.	2a. Check pressure from 3.5 Bar Presssure Reducing Valve. If greater than 3.5 bar replace Pressure Reducer cartridge. 2b. Remove Expansion Relief cartridge from 8 Bar Pressure Relief valve and check seating. If necessary fit new cartridge
Water discharges from the T&P Relief valve intermittently	1. Air volume in expansion vessel has reduced 2. 8 Bar expansion relief valve faulty	1. See Page 30 (Operational Faults section for re-charging) 2. Check valve and replace if necessary
Water discharges from the T&P Relief valve continually	1. Thermal control failure NOTE water will be very hot.	1. Switch off power to immersion heater(s) and shut down boiler. DO NOT turn off water supply. When discharge stops check all thermal controls, replace if faulty.
Milky water	1. Oxygenated water.	1. Water from a pressurised system releases oxygen bubbles when flowing. The milkiness will disappear after a short while.

MAINS PRESSURE HOT WATER STORAGE SYSTEM COMMISSIONING CHECKLIST

This Commissioning Checklist is to be completed in full by the competent person who commissioned the storage system as a means of demonstrating compliance with the appropriate Building Regulations and then handed to the customer to keep for future reference.

Failure to install and commission this equipment to the manufacturer's instructions may invalidate the warranty but does not affect statutory rights.

Customer Name _____ Telephone Number _____

Address _____

Cylinder Make and Model _____

Cylinder Serial Number _____

Commissioned by *(print name)* _____ Registered Operative ID Number _____

Company Name _____ Telephone Number _____

Company Address _____

_____ Commissioning Date _____

To be completed by the customer on receipt of a Building Regulations Compliance Certificate*:

Building Regulations Notification Number *(if applicable)* _____

ALL SYSTEMS PRIMARY SETTINGS (indirect heating only)

Is the primary circuit a sealed or open vented system?	Sealed ☐	Open ☐
What is the maximum primary flow temperature?	____	°C

ALL SYSTEMS

What is the incoming static cold water pressure at the inlet to the system?		____	*bar*
Has a strainer been cleaned of installation debris (if fitted)?	Yes ☐	No ☐	
Is the installation in a hard water area (above 200ppm)?	Yes ☐	No ☐	
If yes, has a water scale reducer been fitted?	Yes ☐	No ☐	
What type of scale reducer has been fitted?			
What is the hot water thermostat set temperature?		____	°C
What is the maximum hot water flow rate at set thermostat temperature (measured at high flow outlet)?		____	*l/min*
Time and temperature controls have been fitted in compliance with Part L of the Building Regulations?		Yes ☐	
Type of control system (if applicable)	Y Plan ☐ S Plan ☐	Other ☐	
Is the cylinder solar (or other renewable) compatible?	Yes ☐	No ☐	
What is the hot water temperature at the nearest outlet?		____	°C
All appropriate pipes have been insulated up to 1 metre or the point where they become concealed		Yes ☐	

UNVENTED SYSTEMS ONLY

Where is the pressure reducing valve situated (if fitted)?			
What is the pressure reducing valve setting?		____	*bar*
Has a combined temperature and pressure relief valve and expansion valve been fitted and discharge tested?	Yes ☐	No ☐	
The tundish and discharge pipework have been connected and terminated to Part G of the Building Regulations		Yes ☐	
Are all energy sources fitted with a cut out device?	Yes ☐	No ☐	
Has the expansion vessel or internal air space been checked?	Yes ☐	No ☐	

THERMAL STORES ONLY

What store temperature is achievable?	____	°C
What is the maximum hot water temperature?	____	°C

ALL INSTALLATIONS

The hot water system complies with the appropriate Building Regulations	Yes ☐
The system has been installed and commissioned in accordance with the manufacturer's instructions	Yes ☐
The system controls have been demonstrated to and understood by the customer	Yes ☐
The manufacturer's literature, including Benchmark Checklist and Service Record, has been explained and left with the customer	Yes ☐

Commissioning Engineer's Signature _____

Customer's Signature _____

(To confirm satisfactory demonstration and receipt of manufacturer's literature)

*All installations in England and Wales must be notified to Local Authority Building Control (LABC) either directly or through a Competent Persons Scheme. A Building Regulations Compliance Certificate will then be issued to the customer.

benchmark COLLECTIVE MARK
THE MARK OF QUALITY FOR THE INSTALLATION, COMMISSIONING AND SERVICING OF DOMESTIC HEATING AND HOT WATER SYSTEMS

©Heating and Hotwater Industry Council (HHIC)

www.centralheating.co.uk

SERVICE RECORD

It is recommended that your hot water system is serviced regularly and that the appropriate Service Record is completed.

Service Provider
Before completing the appropriate Service Record below, please ensure you have carried out the service as described in the manufacturer's instructions.

SERVICE 1 Date
Engineer Name
Company Name
Telephone Number
Comments
Signature

SERVICE 2 Date
Engineer Name
Company Name
Telephone Number
Comments
Signature

SERVICE 3 Date
Engineer Name
Company Name
Telephone Number
Comments
Signature

SERVICE 4 Date
Engineer Name
Company Name
Telephone Number
Comments
Signature

SERVICE 5 Date
Engineer Name
Company Name
Telephone Number
Comments
Signature

SERVICE 6 Date
Engineer Name
Company Name
Telephone Number
Comments
Signature

SERVICE 7 Date
Engineer Name
Company Name
Telephone Number
Comments
Signature

SERVICE 8 Date
Engineer Name
Company Name
Telephone Number
Comments
Signature

SERVICE 9 Date
Engineer Name
Company Name
Telephone Number
Comments
Signature

SERVICE 10 Date
Engineer Name
Company Name
Telephone Number
Comments
Signature

Spares Stockists

Electric Water Heating Co.
2 Horsecroft Place
Pinnacles
Harlow
Essex
CM19 5BT
Tel: 0845 0553811
E-Mail: sales@ewh.co.uk

SPD
Special Product Division
Units 9 & 10
Hexagon Business Centre
Springfield Road
Hayes
Middlesex
UB40 0TY
Tel: 0208 5730574

Parts Center
Network 65 Business Park
Bentley Wood Way
Burnley
Lancashire
BB11 5ST
Tel: 01282 834403
www.partscenter.co.uk

Newey & Eyre
Specialist Products Division
Please Contact your Local Branch

UK Spares Ltd
Unit 1155
Aztec West
Almondsbury
Bristol
BS32 4TF
Tel: 01454 620500

William Wilson Ltd
Unit 3A
780 South Street
Whiteinch
Glasgow
G14 0SY
Tel: 0141 434 1530

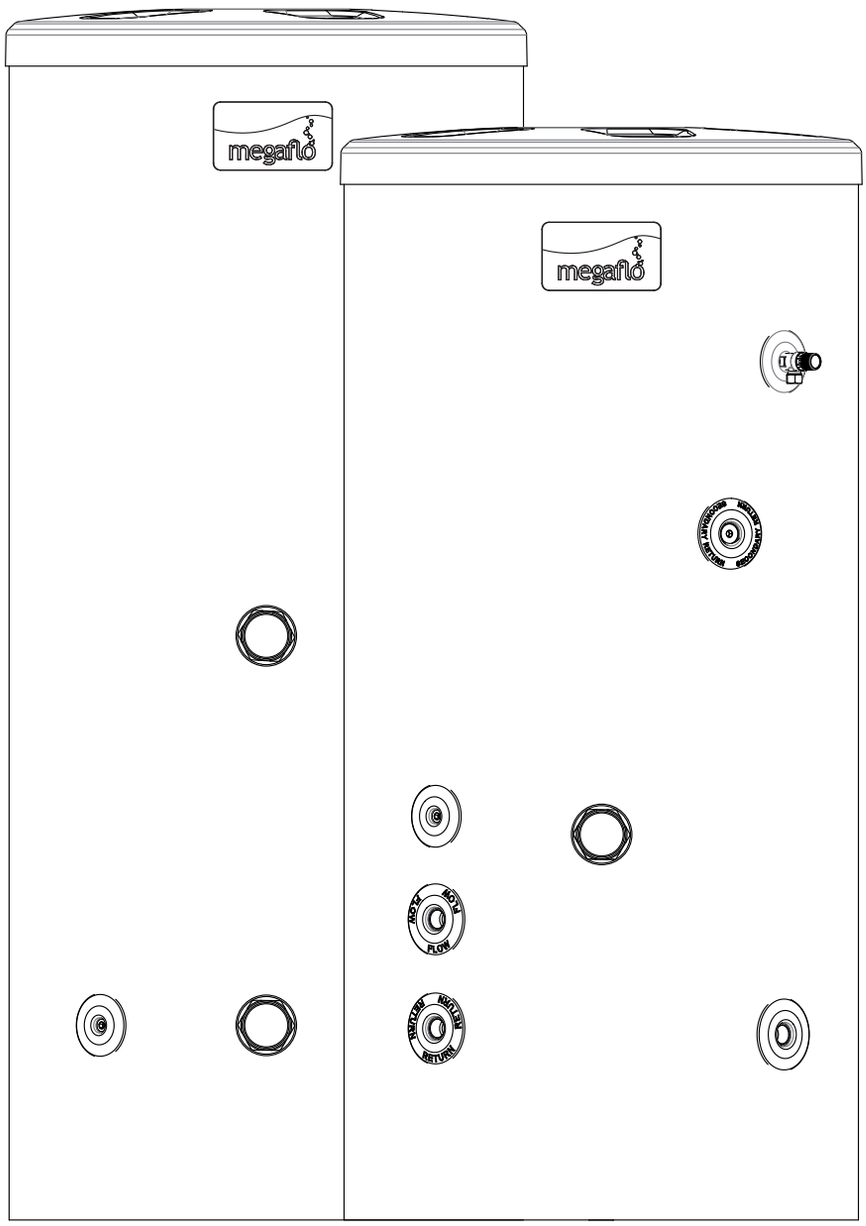

- User Instructions
- Guarantee
- Customer Service

Direct			
Supplier's name or trade mark	Megaflo Eco Plus		
Supplier's model identifier	400	500	570
Storage volume V in litres	400.0	500.0	570.0
Mixed water at 40 °C V40 in litres	772	893	861
The declared load profile	2XL	2XL	2XL
The water heating energy efficiency class of the model	D	D	D
The water heating energy efficiency in %	38.7	38.2	38.4
The annual electricity consumption in kWh	5575	5634	5617
Daily fuel consumption Q fuel in kWh	25.380	25.660	25.580
The thermostat temperature settings of the water heater, as placed on the market by the supplier	60°C		
Specific precautions that shall be taken when the water heater is assembled, installed or maintained and disposed of at end of life	See page 5 to 21		

Indirect			
Model(s)	400	500	570
Energy efficiency class	B	C	C
Storage volume V in litres	400.0	500.0	570.0
Standing loss in W	72.0	89.0	102.0

Table: Technical parameters in accordance with European Commission regulations 814/2013 and 812/2013

NOTES.

IMPORTANT LEGAL REQUIREMENT FOR INSTALLERS

MEGAFLO **Eco Plus, a trading name of Heatrae Sadia Heating, a licensed member of the** Benchmark™ **Scheme which aims to improve the standards of installation and commissioning of domestic heating and hot water systems in the UK and to encourage regular servicing to optimise safety, efficiency and performance. is managed and promoted by the Heating and Hotwater Industry Council. For more information visit www.centralheating.co.uk. Please ensure that the installer has fully completed the Checklist on Page 34 of this manual and that you have signed it to say that you have received a full and clear explanation of its operation. The installer is legally required to complete a commissioning checklist as a means of complying with the appropriate Building Regulations (England and Wales). All installations must be notified to Local Area Building Control either directly or through a Competent Persons Scheme. A Building Regulations Compliance Certificate will then be issued to the customer who should, on receipt, write the Notification Number on the Checklist. This product should be serviced regularly to optimise its safety, efficiency and performance. The service engineer should complete the relevant Service Record on the Checklist after each service. The Checklist may be required in the event of any warranty work.**

User Instructions

Warnings

IF WATER DISCHARGES FROM THE TEMPERATURE / PRESSURE RELIEF VALVE ON THE MEGAFLO **Eco Plus UNIT REFER TO PAGE 25 (TABLE 8) FIRST FOR GUIDANCE. IF THIS DOES NOT RECTIFY THE FAULT SWITCH OFF ELECTRICAL SUPPLY TO THE IMMERSION HEATER(S) [DIRECT UNITS] OR SHUT DOWN THE BOILER [INDIRECT UNITS]. DO NOT TURN OFF THE WATER SUPPLY. CONTACT A COMPETENT INSTALLER FOR UNVENTED WATER HEATERS TO CHECK THE SYSTEM.**

DO NOT TAMPER WITH ANY OF THE SAFETY VALVES FITTED TO THE MEGAFLO **Eco Plus SYSTEM, IF A FAULT IS SUSPECTED CONTACT A COMPETENT INSTALLER.**

Immersion Heaters
A combined thermostat and thermal cut-out is provided for each immersion heater. The thermostat is factory set to give a water storage temperature of approx. 60ºC, however it can be set to control between 10ºC and 70ºC. This will usually have been done during installation. Adjustments can only be made by removing the terminal cover(s), **DO NOT remove the cover(s) without first switching off the electrical supply.** The temperature adjustment is made by inserting a flat bladed screwdriver in arrow top of the thermostat and rotating (see Figure 13, page 19).

If in any doubt consult a competent electrician.

Indirect units are fitted with an Indirect Thermostat which controls a 2-port motorised valve and hence the temperature of the water in the MEGAFLO **Eco Plus** unit. The thermostat is factory set to give a water storage temperature of approx. 60ºC, however it can be set to control between 10ºC and 70ºC, this will usually have been done during installation. Adjustments can only be made by opening the terminal cover. **DO NOT REMOVE THE COVER WITHOUT FIRST SWITCHING OFF THE ELECTRICAL SUPPLY.** Temperature adjustment is made by rotating the knob on the indirect control unit (see Figure 9, page 17) and rotating. At the minimum position the temperature will be approx. 10ºC.

If in any doubt consult a competent electrician.

Flow Performance
When initially opening hot outlets a small surge in flow may be noticed as pressures stabilise. This is quite normal with unvented systems and does not indicate a fault. In some areas a cloudiness may be noticed in the hot water. This is due to aeration of the water, is quite normal and will quickly clear.

Operational Faults
Operational faults and their possible causes are detailed in Table 8, page 25 . It is recommended that faults should be checked by a competent installer. The air volume within the expansion vessel will periodically require recharging to ensure expanded water is accommodated within the unit. A discharge of water INTERMITTENTLY from the expansion valve will indicate the air volume has reduced to a point where it can no longer accommodate the expansion.

Lifetime Warranty*

The MEGAFLO Lifetime Warranty provides unrivalled levels of customer support and peace of mind in the unlikely event that a problem arises from a manufacturing defect. It is supported by a large nationwide team of company-employed field-based engineers and our own call centre, which is open 363 days a year.

This Lifetime Warranty applies in relation to the following MEGAFLO products:

- MEGAFLO cylinders
- MEGAFLO calorifiers

The MEGAFLO Domestic Lifetime* Warranty

The MEGAFLO Domestic Lifetime* Warranty covers MEGAFLO cylinders installed in domestic properties† against corrosion for the lifetime* of the owner.

The cold water combination valve (and expansion vessel, where supplied) is covered by a five year warranty from the date of purchase of the MEGAFLO product that includes both parts and labour. All other components, including any other valves, fittings and controls are covered by a two year warranty from the date of purchase of the MEGAFLO product that includes both parts and labour.

In the case of the Megaflo Systemready, Megaflo Systemfit and Megaflo SolaReady units the supplied pumps and motorized valves (where fitted) are also covered by this two year warranty.

Incalloy immersion heaters (where fitted) are covered by a two year warranty.

Titanium Immersion heaters (where fitted) are covered by a five year warranty.

The MEGAFLO Commercial Lifetime* Warranty

The MEGAFLO Commercial Lifetime Warranty covers MEGAFLO cylinders and calorifiers installed in non-domestic properties^ against corrosion for a period of 30 years from the date of purchase.

All other components, including valves, expansion vessels, immersion heaters, fittings and controls are covered by a two year warranty from the date of purchase of the MEGAFLO product that includes both parts and labour.

Accessories

Shower heat recovery units are covered against manufacturing defects for a period of two years. Flat plate solar collectors are covered against manufacturing defects for a period of 10 years from the date of purchase of the MEGAFLO product. Evacuated tube solar collectors are covered against manufacturing defects for a period of five years from the date of purchase of the MEGAFLO product. All other solar accessories are covered against manufacturing defects for a period of two years from the date of purchase of the MEGAFLO product.

Outside of the UK

These warranties are valid for installations within the United Kingdom.

For installation in the Republic of Ireland please contact Potterton Myson (Ireland) Limited on 00353 (0) 1 4590870

For installations outside of the United Kingdom and the Republic of Ireland, please telephone MEGAFLO Export on +44 1603 420271 for further details of the warranty terms and conditions applicable.

These guarantees are valid provided that:

- The MEGAFLO product has been installed by a competent installer in accordance with the instructions contained in the installation instructions and in compliance with all relevant laws, guidance, codes of practice and regulations in force at the time of installation.

- The MEGAFLO product has not been modified or tampered with in any way, other than by a Heatrae Sadia or Baxi Customer Support approved engineer.

- The MEGAFLO product has not been subject to damage by scale.

- The MEGAFLO product and any part or parts of the MEGAFLO product (whether factory fitted or otherwise) have not been repaired or replaced other than by a Baxi Customer Support approved engineer and any replacement parts used on

the MEGAFLO product are authorised MEGAFLO spare parts.

• The factory fitted temperature and pressure relief valve have not been tampered with or removed.

• The MEGAFLO product has not been subject to misuse or neglect.

• The MEGAFLO product has only been used for the storage of wholesome water. Should another substance be put through the product, the warranty will be invalid unless it is part of a disinfectant procedure carried out in accordance with BS EN 806.

• The MEGAFLO product has not been subjected to frost or freezing temperatures (except for solar collectors which are designed for external installation).

• The Benchmark™ commissioning checklist service record, included in the MEGAFLO installation instructions has been completed.

• Regular maintenance has been carried out by a competent person/, an approved engineer from Heatrae Sadia or any other part of the Baxi Group Baxi Customer Support approved engineer in accordance with the requirements set out in the maintenance section of the installation instructions.

• Access is available, at reasonable times and upon reasonable notice, to the MEGAFLO product to allow for any inspection repair or replacement.

• The product is registered within 60 days of purchase. This can be done by telephone, online or by using the registration form provided with the product.

• Evidence of purchase (for example a receipt or delivery note) and date of supply is submitted when making a claim.

• The MEGAFLO product has not been affected by any cause beyond our reasonable control including, without limitation: an act of God, explosion, flood, fire or accident; war or civil disturbance; strike, industrial action or stoppages of work; any form of government intervention; a third party act or omission including theft or malicious damage; failure by you to give us a correct delivery address or notify us of any change of address.

.

If any of the following situations occur, the MEGAFLO Lifetime Warranty* will not apply:

• Any wilful or accidental damage caused by your negligence

• Damage caused as a result of scale.

• Installation not in line with the installer and user manuals provided,

• Failure to comply with installation instructions (whether oral or in writing),

• Misuse of the MEGAFLO product or alteration of the MEGAFLO product not in accordance with the requirements set out above.

• Defects which are not reported to us outside of the warranty period on 03444 8711535 or customer.support@baxi.co.uk

• Any third party repair or replacement costs unless those costs have been agreed and authorised by Baxi Customer Support or Heatrae Sadia in writing prior to incurring the costs.

• In relation to the MEGAFLO Commercial Lifetime Warranty only, we will not be liable for any indirect and consequential losses and any loss of earnings, loss of business, or losses in relation to stress and inconvenience, howsoever caused.

Claims

Defects should be reported to us as soon as you are aware of them. Please report defect to us by contacting 03444 8711535 or customer.support@baxi.co.uk .

Notes

We are only able to carry out warranty repair/replacement to MEGAFLO solar collectors which have safe access and that meet current Health & Safety working at heights requirements. The customer will cover the cost of any safety equipment including but limited to scaffolding and lifting equipment that is required to meet this standard and will appoint a contractor to carry this work out.

Heatrae Sadia accepts no liability for any third party damage.

These warranties do not affect your statutory rights and remedies in relation to the MEGAFLO products.

Annual service

Annual services are available from Baxi Customer Support, the service division of Heatrae Sadia.

Please contact Baxi Customer Support on 0844 871 1535 for details.

*In domestic† properties, lifetime is the period during which the first owner of the MEGAFLO or new build home continues to own the property. Should the property be sold, the new owner and any subsequent owners will receive a 30 year warranty from the date the original owner purchased the MEGAFLO or new home with a MEGAFLO installed. In non-domestic properties lifetime is a period of 30 years from the date of purchase by the original owner and is transferable to any new owner of the property.

†Domestic is any premises not being, or ever having been, wholly or partly utilised for business purposes.

^Non-domestic premises are any premises other than those defined as Domestic.†

All MEGAFLO warranties are conditional on the installation being carried out in accordance with the installation instructions supplied with the product. These warranties do not affect your statutory rights. Full terms and conditions of these warranty packages are available on request or via www.heatraesadia.com/megaflo

Heaatrae Sadia*, Hurricane Way, Norwich, Norfolk, NR6 6EA

MEGAFLO may introduce modifications to their products from time to time. Consequentially the details given in this brochure are subject to alteration without notice.

Contacts

Specification Advice Hotline

T: 01603 420220

F: 01603 420229

E: specifier@heatraesadia.com

www.heatraesadia.com

* Heatrae Sadia is a trading name of Baxi Heating UK Limited, Brooks House, Coventry Road, Warwick, CV34 4LL

July 2015

Customer service

Telephone:
0344 8711535

Facsimile:
0344 8711528

E-mail:
megafloservice@heateam.co.uk

Megaflo

Hurricane Way
Norwich
Norfolk
NR6 6EA

BY HEATRAESADIA